Operator's Manual

en (English)

ENGLISH

CONTENTS

Note to Operators and Supervisors 2
Before Initial Operation 2
Caution Plates 6
Main Components 10
Driving Controls and Instrument Panel 10
Instruments 11
Multifunction Display (Option) 15
Switches and Levers 21
Body Components 32
Handling the Toyota DPF-II System (Option) 42
Pre-Operation Check 45
Before Garaging the Vehicle 51
Weekly Maintenance 51
Self Servicing 53
Fuel Tank Check 56
Frame Serial Number 56
How to Read the Name Plate 57
Lubrication Chart 57
Periodic Maintenance 58
Periodic Replacement Table 58
Protect Your Investment with Toyota Genuine Parts 58
Periodic Maintenance Table 59
Service Data 63
LPG Device (Option) 65
Wheel & Tire 73
Vehicle Dimensions 74

NOTE TO OPERATORS AND SUPERVISORS

This manual explains the correct operation and maintenance of Toyota Industrial vehicles as well as daily lubrication and periodic inspection procedures.

Please read this manual thoroughly even though you may already be familiar with other Toyota Industrial vehicles because it contains information which is exclusive to this series of vehicles. The manual has been produced based on a standard vehicle. However, if you have questions on other types, please contact your Toyota Industrial vehicle dealer (Toyota dealer).

In addition to this manual, it is essential that you review the separate publication entitled "Operator's Manual for Safety Operation" for forklift vehicle operators. It contains important information about the safe operation of forklift vehicles. Toyota reserves the right to make any changes or modifications of specifications in this manual without giving previous notice and without incurring any obligation.

BEFORE INITIAL OPERATION

- **Please read this manual thoroughly.** This will give you a complete understanding of Toyota industrial vehicles and permit you to operate them correctly and safely.
  Correct handling of new vehicles promotes performance and extends service life. Drive with special caution while becoming familiar with a new vehicle.
  In addition to the standard operating procedures, pay attention to the following safety items.
- **Please acquire thorough knowledge of the Toyota Industrial vehicle.** Read the operator's manual thoroughly prior to operating the vehicle. Get to know its operation and components. Learn about the safety devices and accessory equipment and their limits and precautions. Be sure to read the caution plate attached to the vehicle.
- **Please learn safe driving points and safety management.** Understand and maintain working area traffic rules. Ask the work area supervisor about any special working precautions.
- **Wear neat clothing for operation.** Improper clothing for vehicle operation may interfere with smooth operation and cause an unexpected accident. Always wear appropriate clothing for easy operation.
- **Please keep away from live electric power lines.** Know the locations of inside and outside power lines and maintain sufficient distance.
- **Be sure to perform pre-operation checks and periodic maintenance.** This will prevent sudden malfunctions, improve work efficiency, save money and insure safe working operation.
- **Always warm up the engine before starting operation.**
- **Be sure to avoid forward tilt when the forks are elevated with a load.** In the worst case, this will cause overturning due to poor stability resulting from forward shifting of the center of gravity.
- **Never attempt traveling when the forks are elevated with a load beyond the specified height.** Traveling with a load on the forks elevated beyond the specified height may cause overturning due to the upward shift of the center of gravity. Keep the forks weight at 10-20cm (6-8in) above the ground when traveling.
- **Please avoid overloading or uneven loading.** Overloading or an uneven load is dangerous. If the center of gravity is not evenly distributed, i.e. nearer to the front side of the load and the load is below the maximum, limit the load weight according to the load rating table.
- **If you hear any unusual noise or sense anything unusual, stop, inspect and repair immediately.**
- **Be sure to observe the correct operating procedures and precautions for the operation of vehicles equipped with power steering and power brakes.**
- **If the engine stops during traveling, this will affect the operation.** Stop the vehicle in a safe place as described below. Steering operation becomes heavy because the power steering becomes ineffective. Operate the steering wheel more firmly than usual.
- **Please use only the recommended types of fuel and lubricants.** Low-grade fuel and lubricants will shorten service life.

Diesel fuel

Recommendation

Use diesel fuel with a cetane index of 46 or more and a sulfur content of not more than 10 ppm that is based on European diesel fuel standard EN590/2009.

⚠ **Caution**

In winter, use winter diesel fuel to prevent clogging of the fuel filter caused by paraffin precipitation.

- **Flammable and/or combustible materials can be damaged and in some cases ignited by a hot exhaust system or hot exhaust gases. To minimize the possibility for such damage or fire, the operator must obey the following recommended practices:**
- Do not operate the lift vehicle over or near flammable and/or combustible materials, including dried grass and paper scraps.
- Park the lift vehicle with rear end at least 30 cm (12 in) away from lumber, veneer board, paper products and other similar materials to avoid discoloration, deformation or combustion of those materials.
- For the vehicles using color tires, a static strap must be fixed.

Safety requirements

- Trucks equipped with a load bearing clamp (e.g. paper clamp) shall feature control(s) with a secondary action to prevent unintentional release of the load. When any "load bearing clamp" is used on a lift truck, the control (hydraulic hand lever for example) must be configured to conform to the ISO3691-1.

Precautions to be taken when using SAS models

(SAS: System of Active Stability)

Note:
Some models are not equipped with the SAS system. Regarding SAS models, contact a Toyota dealer.

⚠ **Caution**
- **Whenever you get on an SAS models, please check the caution plate, which will inform you what functional features are provided on the vehicle. Do not proceed to operate the vehicle before making certain that each of the features is operating correctly.**

- **For those models fitted with double/dual wheels, there is no rear tire swing lock control cylinder/stabilizer.**

- **While driving the vehicle, be alert about any warning lamp that may appear. Should an error code be indicated by a warning lamp or the hour-meter, park the vehicle at a safe location and ask a Toyota dealer for an inspection.**
- **The SAS, which is electronically controlled, may need to be initialized after completion of a maintenance operation. Do not remove or modify any SAS features. Whenever an inspection may be necessary, make contact with a Toyota dealer.**
- **When washing the vehicle, carefully prevent water from spraying directly over the electronics (controller, sensor and switches) employed in the SAS.**

Description of features available in SAS models

Active control rear stabilizer:
When the vehicle makes a turn on the spot, a centrifugal force will be generated in the lateral direction of the vehicle. In such an event, this feature will operate so that the rear axle will be locked from pivoting to support the vehicle on four wheels. Thus, the vehicular stability will be enhanced in both right and left directions.

⚠ **Caution**
With the rear axle locked from pivoting, the stability will be increased. Nevertheless, it does not signify that the vehicle would never tipover. Operate the vehicle as outlined in this manual.

Automatic forks leveling control

- With tilting the mast forward while pressing the tilt lever knob switch will cause the fork to automatically stop at its horizontal position (the mast vertically positioned).
- After stopping the forks at its horizontal position with the tilt lever knob switch pressed, you may want to tilt the forks further forward. To do this, return the tilt lever to the neutral position once. Then, after releasing the tilt lever knob switch, operate the tilt lever.

When the tilt lever is operated from the backward to forward position with the knob switch depressed, the mast will perform as follows:

	Not load	Loaded
High lift height	Stops with forks level (mast vertical)	No forward tilt
Low lift height	Stops with forks level (mast vertical)	

⚠ **Caution**
- **With the mast titled forward with a load on the forks and elevated, pressing the tilt lever knob switch will cause the mast to stop moving. Absolutely avoid such operation because this automatic forks leveling control, if operated while handling a load, may cause the vehicle to tipover.**
- **In case of the vehicle with an attachment, do not allow the forks to be automatically positioned horizontally, with a load on the elevated while the engine is running at high rev. This will lead to a hazard.**
- **Some specialty models onto which a heavy attachment is mounted may not be equipped with the automatic forks leveling control. Confirm with a Toyota dealer in advance.**

Note:
- The mast will not move if it is tilted forward by pressing the tilt lever knob switch with a load at an elevated height (more than 2 m).
- When the mast is tilted forward from its vertical position, it will not be possible to tilt forward even if the tilt lever knob switch is pressed.
- While it is tilting backward, the forks will not stop at the horizontal position (mast vertical) even if the tilt lever knob switch is pressed. (except vehicles equipped with mini lever or joy stick)

Active mast front tilt angle control

According to the lift and to the load, the angle at which the mast can be tilted forward is automatically controllable within a range of angles illustrated below.

	Light load (no load)	Intermediate load	Heavy load
High lift height	No restriction for front tilt angle	Angle restricted between 1° and 5° forward tilt angle	Forward tilt angle restricted to 1°
Low lift height	No restriction for front tilt angle		

⚠ **Caution**
- **If a load is tilted forward at a low lift height, and then the load is elevated there is a fear that the vehicle may tip forward when the load stops at a height having a tilt angle beyond the specified angle range. Always ensure the mast is vertical when elevating the load or forks and only tilt forward when the height required has been reached.**
- **With a load at a high lift height, never match the load (mast angle) by controlling the mast forward tilt angle, since it involves the fear that the vehicle may tip forward.**
- **Even with a load positioned within the allowable angle range, never tilt the mast beyond its vertical position, or the vehicle may tip over, losing its stability forward or backward. Never tilt the mast forward, with an elevated load.**

⚠ **Caution**

- **Some specialty models onto which a heavy attachment is mounted may not be equipped with the mast forward tilt control. Confirm with a Toyota dealer in advance.**
- **Once you have mounted or replaced any attachment on a forklift, ask a Toyota dealer for an inspection.**
- **If you use two or more removable attachments alternately, the heaviest one should be used to carry out matching (SAS setting). Contact your Toyota dealer to request compatibility matching.**
- **When attaching an attachment to a model without forks, the attachment must be compatible with the model. Contact your Toyota a dealer to request compatibility matching.**

Note:

When the forks are elevated to the maximum height, a high pressure (relief pressure) may remain in the lift cylinder. This high pressure causes the vehicle to judge that it has a high load even if there is no load. As a result, the mast will be stopped from tilting forward. In this case, lower the forks slightly (to release the pressure) and the mast may be tilted forward.

Active mast rear tilt speed control

- At a high lift height, the mast has a backward tilt speed controller (slow down) irrespective of the load. When lowering from a high lift height to a lower lift height while tilting the mast backward, the control speed will not change.
- At a low lift height, the mast can be tilted at full speed even if there is a load. If the mast is tilted backward at a low lift height with the tilt knob switch pressed, the mast has the backward tilt speed controlled (slowed down) as long as the tilt lever knob switch is pressed. (Except mini lever/joy stick models)
- If the low lift height is then changed to a high lift height while tilting the mast backward, the control speed will not change as long as the tilt lever knob switch is pressed. The mast may be tilted backward at the full speed so long as the tilt lever knob switch is not pressed.

Key-lift interlock

When the ignition switch is turned to OFF and lowering the lift lever, the forks will not lower. However, by sitting on the normal seated position and turning the ignition switch to ON, the forks will lower even when the engine is off. (Except mini lever/joy stick models)

Active steering synchronizer

If the steering wheel knob is not angularly matched with the steer tires, such out-of-position will be automatically corrected while turning the steering wheel. Thus, the knob is kept at a constant position relative to the steer tires.

If SAS feature should fail:

The SAS models are equipped with a controller, sensors and various actuators. If any of these are found not to be operating normally, it will tell you that:

- Steering wheel knob is out-of-position may not be corrected.
- Functions such as Automatic forks levelling control, Active mast front tilt angle control, Active mast rear tilt speed control may not be operated.
- Swing lock cylinder may not be unlocked.

If any of the phenomena referred to above should take place.

- Diagnosis lamp will light up or blink.
- Error code will be displayed in the hour meter.
  Thus, the operator will be informed. In such an event, move the vehicle to a safe location and ask a Toyota dealer to inspect and repair.

Action to be taken in emergency

Move the vehicle to a safe location and ask a Toyota dealer for a repair.

If any phenomenon different from normal operations (failure to run or the like), among others, should take place, ask a Toyota dealer for an inspection.

Note:

Once a torque converter model has its control lever abnormal, it is impossible to manually operate the vehicle, which need be towed, accordingly.

OPS System

The OPS (Operator Presence Sensing) System prevents traveling and load handling operations when the operator is not seated in the operator's seat.

If the operator leaves the operator's seat while the vehicle is operating, the OPS lamp will light up, and a buzzer will sound for one second to warn the operator that the OPS System will be activated. If the operator leaves the operator's seat for longer than two seconds, the OPS System will be activated and traveling and load handling operations will be stopped. However, if the operator returns to the normal seating position within two seconds, the OPS System will not activate and will allow travel and load handling operations to continue.

Again, if an abnormality occurs to the OPS System, the diagnosis lamp will blink to warn the operator. In this case, the OPS System may have malfunctioned. Contact your Toyota dealer to request an inspection.

⚠ CAUTION

(1) This vehicle is equipped with a system that turns on the light and restricts the operation of the mast etc when the operator is not seated in the driver's seat.

(2) If one of the following faults occurs, stop operation and contact your Toyota dealer for inspection.
- The light does not go on when the operator leaves the driver's seat.
- The light does not go out when the operator sits in the driver's seat.
- The light blinks but does not go out when the operator sits in the driver's seat after leaving it temporarily.
  (This light can sometimes remain lit for a while after the start of the engine, but this does not mean that the system is faulty.)

(3) If the need to replace the driver's seat arises, be sure to replace it with a Toyota genuine seat.

This forklift is equipped with an OPS (Operator Presence Sensing) System. Before operating the forklift, check that each of the System's functions is working correctly.

Travel OPS Functions

If the operator leaves the seat while the vehicle is traveling, the OPS lamp will light up, and two seconds later, traveling will be stopped. However, this does not apply the brakes to stop travel. (If the operator returns to the normal seating position within 2 seconds, traveling can be continued.)

If the OPS System is activated while driving up a slope or incline, the drive to the front wheels is stopped and consequently the vehicle will roll back down the slope incline. To avoid this problem, make sure to sit on the seat at all times.

If more than 2 seconds has elapsed, apply the brakes, return the control lever to the neutral position and sit on the seat again.

Load Handling OPS Function

Forklifts with a standard lever

If the operator leaves the seat during operations, the OPS lamp will light up, and two seconds later, load handling operations will be stopped. (If the operator returns to normal seating position within 2 seconds, loading can be continued.) If the operator leaves the seat while operating the control lever, loading can be continued for 2-4 seconds.

If load-handling OPS is activated when the lift lever is in the lowering position, move the lever to a position other than the lowering position and return to the normal seated position to deactivate load handling OPS. If load-handling OPS is activated when the lift lever is in a position other than the lowering position, load handling OPS is deactivated 1 second after the operator returns to the normal seated position.

Forklifts with a mini lever/joy stick lever

(Option)

If the operator leaves the seat during load handling operations, the OPS lamp will light up, and two seconds later, load handling operations will be stopped. (If the operator returns to the seat within 2 seconds, load handling operations can be continued.)

To resume load handling functions, return to the seat and return all of the levers to the neutral position.

OPS Operation Functions

If the operator leaves the seat, a buzzer will sound for approx. one second ("pii") and the OPS lamp will light up and inform the operator that the OPS System is active. If the operator returns to the normal seating position, the OPS lamp will turn off.

Return-to-Neutral Warning

If the OPS System has caused traveling operations to stop, and the operator is re-seated while the control lever is not returned to the neutral position, the buzzer will sound ("pi, pi, pi...") indicating that the travel OPS functions has not been deactivated.

Forklifts with a standard lever

If the OPS System has caused load handling operations to stop, and the operator is re-seated while the lift lever is still set in the lowering position, the buzzer will sound ("pi, pi, pi...") indicating that suspension of lowering has not been deactivated.

Forklifts with a mini lever/joy stick lever (Option)

If the OPS System has caused load handling operations to stop, and the operator is re-seated without returning all load handling levers to neutral position, the buzzer will sound ("pi, pi, pi...") indicating that the OPS System has not been deactivated.

SAS/OPS Controller Abnormality Warning

If the SAS/OPS System registers an abnormality, the diagnosis lamp will blink to inform the operator.
If the diagnosis lamp starts blinking, the SAS/OPS System may have malfunctioned. Park the vehicle at a safe location and request an inspection by your Toyota dealer.
In the following cases, park the vehicle in a safe location and have the vehicle inspected by your Toyota dealer.

- The OPS lamp does not light up even if the operator leaves the seat.
- The OPS lamp does not turn off even if the operator is re-seated. (In the case of diesel engine vehicles, the diagnosis lamp may light up during engine warm-up after a cold-start, but does not indicate an abnormality.)

⚠ **Caution**

When the ignition switch is turned to OFF, and the operator has been seated for a long period, there are the cases where the OPS lamp blinks when the ignition switch is turned to ON. In that case, the light will go out by leaving the seat once and return to the normal seated position.

The Auto Speed Control Functions (Option)

⚠ **Caution**

- **The optional Auto Speed Control Functions limit maximum travel speed and high speed acceleration relative to load height and weight and reduces the chances of tip-overs. However, this feature will not prevent all tip-overs in all circumstances.**
- **According to road surface conditions and loading operations, temporary changes in speed limits and sense of acceleration may be experienced.**
- **During operation using the inching and brake pedal, temporary changes in speed limitations and sense of acceleration may be experienced.**
- **There are cases where the idle-up of engine increases the vehicle speed, when the lift lever is operated upward on the idle conditions.**

Speed limits after load lifting height and weight sensing

(Maximum speed limiter)

When the load is in an elevated position, this function limits the maximum speed in accordance with the weight of the load. This function reduces instability caused by sudden stopping.

Note:

- Although the maximum speed limiter will be deactivated when the load is lowered, sudden accelerations will remain limited until the accelerator pedal is re-engaged.
- If the load height is raised when the speed limit is exceeded, the speed will be gradually reduced until the set speed limit is reached.

(Auto speed control indicator)

Auto speed control indicator will be displayed to inform the operator the speed limit after load lifting height and weight sensing is in operation.

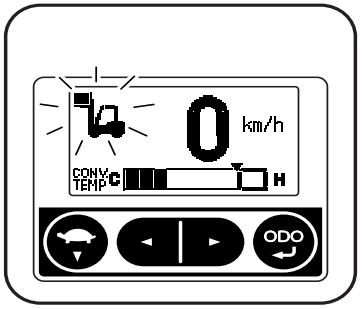

Load height and weight sensors to prevent sudden acceleration

(Acceleration limiter)

When the load is in an elevated position, this function limits sudden acceleration of the vehicle in accordance with the weight of the load.

(Preventing sudden starts)

When the load is in an elevated position at a high engine rev, this function will suppress the sudden acceleration of the vehicle and resultant loss of the load even if the vehicle is operated erroneously such as by abruptly releasing the brake pedal or the inching and braking pedal while the accelerator pedal is engaged, or by setting the control lever in forward or reverse direction.

(Loading priority function)

If you depress the clutch and brake pedal when the load height and weight sensors to prevent sudden acceleration in operation or when the control lever in neutral and re-press the accelerator only if below constant speed, this function will release the Maximum speed limiter and the Acceleration limiter to reduce the impact of loading.

(Function on/off indicator)

When the load height and weight sensors to prevent sudden acceleration in operation and the speed limits after load lifting height and weight sensing is de-active, the function on/off indicator will be displayed to inform the operator.

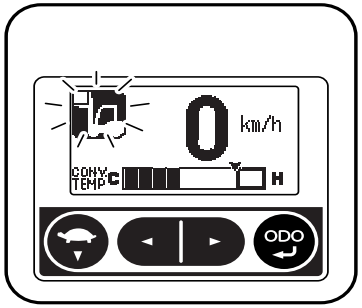

Low speed setting

When the low speed setting switch is pressed, traveling will not be possible at the preset speed or greater.
Pressing the low speed setting switch again will deactivate this function.
Maximum speeds can be set between approximately. 8-15 km/h.

Note:

- Depending on the vehicle weight, the set speeds may not be attained while traveling uphill. Similarly, the set speed may be exceeded during downhill travelling, but will resume at the set speed when it is reached after going down the hill.
- When a maximum speed limit has also been set, the lower speed setting will take precedence.
- Depending on road surface changes and the vehicle conditions, the set speed may be exceeded temporarily.
- When setting the maximum speed, consult your supervisor or a Toyota dealer.

Maximum speed limit

This function prevents the vehicle from traveling at a faster speed than a speed preset by your supervisor or company. The maximum speed can be set between approximately. 8-15 km/h.

Note:

- Depending on the vehicle weight, the set speed may not be attained while traveling uphill. Similarly, the set speed may be exceeded during downhill travelling, but will resume at the set speed when it is reached after going down the hill.
- Depending on road surface changes and the vehicle conditions, the set speed may be exceeded temporarily.
- When setting the maximum speed, consult your supervisor or a Toyota dealer.

Increasing the idling lifting speed

When the lift lever is raised, the forks can be raised at a steady speed without pressing on the accelerator pedal to increase the engine rev.

Note:

- There are circumstances where the idle-up of engine increases the vehicle speed when the lift lever is operated.
- The lifting speed will differ depending on the vehicle model, specifications, and load conditions.

Recycling/discarding

In accordance with EU Directive 2006/66/EC,
This symbol indicates 'separate collection' for all batteries and accumulators.

Your truck uses a lead accumulator and, in case of some battery-powered truck, a lithium battery.

Materials contained in batteries (include accumulators) are hazardous to the environment and humans, so batteries should be returned to the manufacturers for recycling.

Discarding the battery

When the working life of the battery in the truck is at an end (exchange to a new battery) or if the entire truck is to be scrapped, special regard to environmental risks shall be taken when disposing/recycling batteries.

Consult our Toyota service dealers about exchange or discarding the batteries.

CAUTION PLATES

Caution plates are attached on a vehicle. Before driving it, please be sure to read them thoroughly.

When caution plates become unreadable, dirty, or damaged, replace with new ones. Regarding caution plate indicators, ask a Toyota dealer.

(The sample shows those of an English version.)

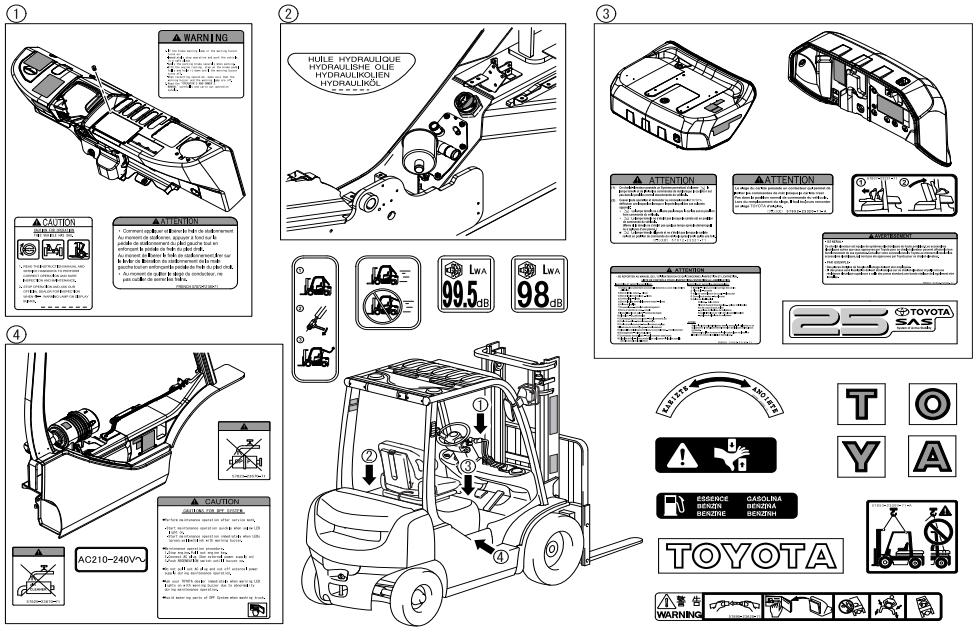

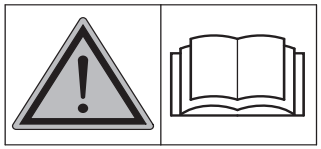

About these marks

Warnings! Please read this Operator's Manual carefully before use.

Warning labels

Warning labels comprise of signal words, pictographs, and text to explain about the level of danger, dangerous incidents that might happen, and how to avoid them. Make sure to read warning labels thoroughly before operation and act according to the instructions.

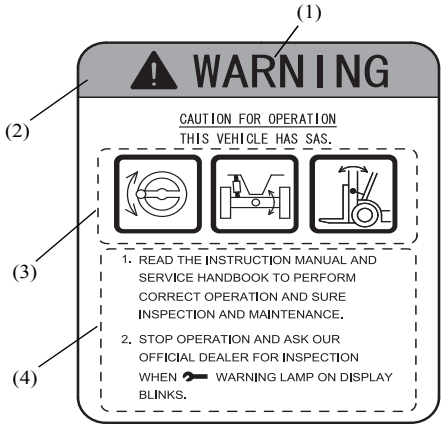

(1) Signal words
(2) Signal color
(3) Pictographs
(4) Text

(1) Signal word → (2) Signal color

- **DANGER →Red**
Disregarding instructions incurs the risk of death or severe injury.
- **WARNING →Orange**
Disregarding instructions incurs the potential risk of severe injury or death.
- **CAUTION →Yellow**
Disregarding instructions incurs the risk of light injury. Or the mark warns about the unsafe act.

(3) Pictographs

Illustrations show dangerous incidents that might happen, the extent of damage, and how to avoid danger.

(4) Text

Text explains about dangerous incidents that might happen, the extent of damage, and how to avoid danger.

Explanation about pictographs

Symbols	Explanation about symbols.	Symbols	Explanation about symbols.	Symbols	Explanation about symbols.
	General Prohibition		Read operator's manual		Read operator's manual
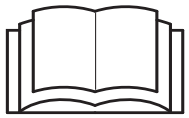	Read operator's manual		Read operator's manual		Fuel

Symbols	Explanation about symbols.	Symbols	Explanation about symbols.	Symbols	Explanation about symbols.
	Unleaded Gasoline		Explosion		Corrosion
	Diesel fuel		Diagnosis lamp		Parking Brake-On
	Parking brake		OPS lamp		Recycle
	Check Hydraulic oil Level		Crash the hand or finger		Crossed-out wheeled bin
	Ventilating and air-circulating fan		Safety Glass		Fasten the seat belt
	No open flame		Keep out children		Keep off under the fork

Symbols	Explanation about symbols.	Symbols	Explanation about symbols.	Symbols	Explanation about symbols.
	Keep off on the fork		Knob position Control	AIR CLEANER	Do not water to the DPF Air Cleaner
	Lean away from the direction of tipover		Mast Control		
	Grip the steering and brace your feet in case of a truck tipover.		Swing Lock Control		
	Do not jump, stay with the truck in case of a truck tipover.		No SAS Mast Control		
	Do not open the cap when the coolant is hot		No Swing Lock Control		
	How to hoist the truck (Vehicle hoisting method)	DPF	Do not water to the DPF Muffler		

MAIN COMPONENTS

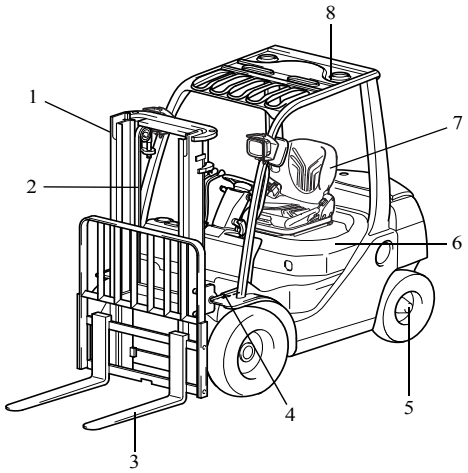

1. Mast
2. Chain
3. Forks
4. Tilt cylinder
5. Rear axle
6. Engine hood
7. Operator's seat
8. Head guard

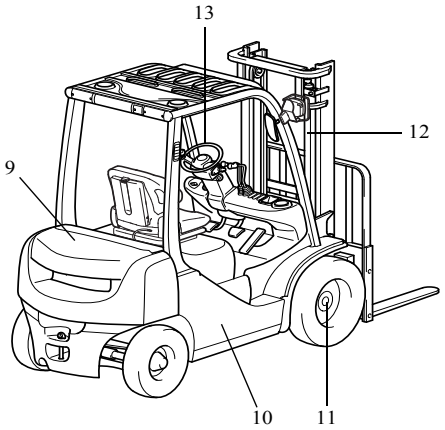

9. Counter weight
10. Frame
11. Front axle
12. Lift cylinder
13. Steering wheel

DRIVING CONTROLS AND INSTRUMENT PANEL

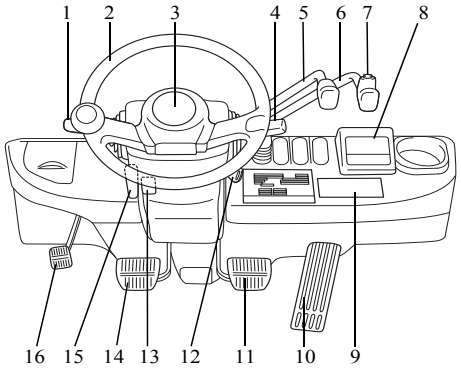

1. Control lever
2. Steering wheel
3. Horn button
4. Light control and turn signal switch
5. Lift lever
6. Tilt lever
7. Tilt lever knob switch
8. Multi function display (Option)
9. Combination meter
10. Accelerator pedal
11. Brake pedal
12. Ignition switch
13. Parking brake release lever
14. Inching and brake pedal
15. Tilt steering adjust lever
16. Parking brake pedal

INSTRUMENTS

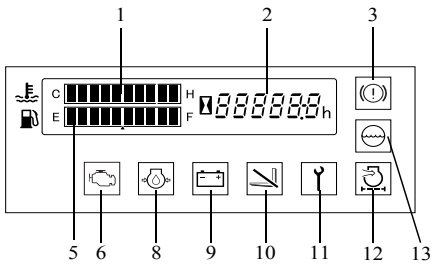

Gasoline engine models

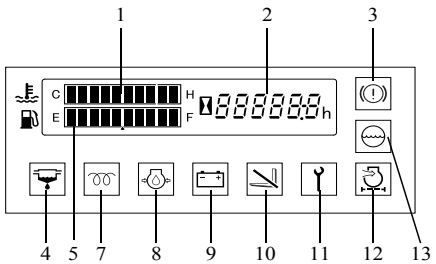

Diesel engine models

Combination meter

Meters and warning lamps are arranged as shown in the left figures.

1. Water temperature gauge
2. Hour meter
3. Brake warning lamp (OK monitor: Option)
4. Sedimenter warning lamp (Diesel engine models)
5. Fuel gauge
6. Engine check lamp (Gasoline engine models)
7. Glow indicator lamp (Diesel engine models)
8. Engine oil pressure warning lamp
9. Charge warning lamp
10. OPS lamp
11. Diagnosis lamp
12. Air cleaner warning lamp (OK monitor: Option)
13. Coolant level warning lamp (OK monitor: Option)

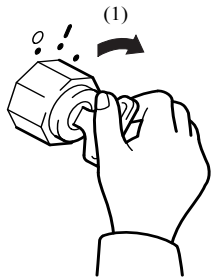

(1) Start

Warning lamp check method

Please check if all warning lamps come on when the ignition switch is turned to ON.

Note:
Use the light control switch to check the meter-lighting lamp.

⚠ **Caution**

- **The glow indicator lamp (Diesel engine models) is only on for 2 seconds when the engine coolant temperature exceeds 50°C.**
- **If a lamp does not light up, contact your Toyota dealer to request an inspection.**

Hour meter also serving as diagnosis indicator

The hour meter operates when the ignition switch is turned to ON. It indicates the total number of vehicle operating hours.
The unit of the right most digit is 1/10 hour.

Please use this meter for the timing of periodic maintenance and recording the operation hours.
When an abnormality occurs to the vehicle (diagnosis lamp lights up or blinks) the error code and hour meter will be alternately displayed.

⚠ **Caution**

Should an error code be displayed, park the vehicle in a safe location and contact your Toyota dealer to request an inspection.

en

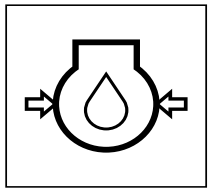

Engine oil pressure warning lamp

Comes on to indicate low engine oil pressure while the engine is running.

1. If normal, the lamp comes on when the ignition switch is turned to ON and goes off when the engine starts.
2. If the lamp comes on while the engine is running, either the engine oil is low or the lubrication system is faulty. Stop the operation immediately and ask a Toyota dealer for inspection and repair.

Note:
The "engine oil pressure warning lamp" does not indicate the oil level. Check the oil level using the oil level gauge before starting work.

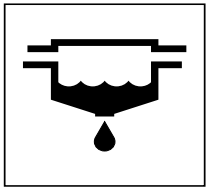

Sedimenter warning lamp
(Diesel engine models)

The sedimenter is a device for separating water from the fuel.

1. The warning lamp comes on to indicate water in the sedimenter exceeds the predetermined level while the engine is running.
2. If normal, the lamp comes on when the ignition switch is turned to ON and goes off when the engine starts.
3. If the lamp comes on while the engine is running, drain water immediately. (See the self service section for the draining instructions.)

⚠ **Caution**
Continued operation with the lamp on may cause seizure of the injection pump and pump damage. If the warning lamp lights up, always make sure to drain the water.

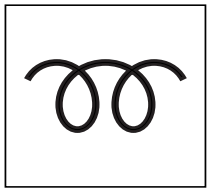

Glow indicator lamp
(Diesel engine models)

Indicates heating of glow plugs.
When the ignition switch is turned to ON, the lamp comes on and glow plug heating begins. The lamp goes off automatically when glow plug heating is complete. The engine will start easily once the glow plugs are heated.

Note:
The glow indicator lamp is on for 2 seconds when the engine coolant temperature exceeds 50°C.

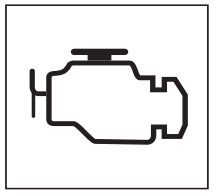

Engine check lamp
(Gasoline engine models)

1. When an error occurs to the engine controller, the display will light up to inform the operator.
2. When condition is normal, the lamp will light up when the ignition switch is turned to the ON position. The lamp will turn off when the engine is started.

⚠ **Caution**
If the engine check lamp lights up during operation, stop operations and park the vehicle in a safe location, ask your Toyota dealer to perform an inspection.

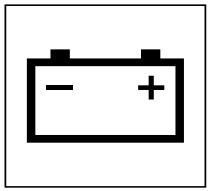

Charge warning lamp

1. This lamp comes on to indicate an abnormality in the charging system while the engine is running.
2. If normal, the lamp comes on when the ignition switch is turned to ON and goes off when the engine starts.
3. If the lamp comes on while the engine is running, stop immediately, park the vehicle in a safe location, stop the engine and after the engine has cooled down inspect the fan belt for cuts or looseness, adjust it, and restart the engine.
   If lamp does not go off, the electrical system may be faulty.
   Please ask a Toyota dealer immediately for inspection and repair.

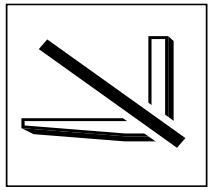

OPS lamp

If the operator leaves the seat, the OPS lamp will light up, indicating that the OPS System is operating. (If the operator returns to normal seating position within 2 seconds, loading can be continued.) In such a situation, return the control lever and lift lever to the neutral position, then sit on the seat again.

⚠ **Caution**

In the following cases, a malfunction may have occurred to the OPS System. Park the vehicle in a safe location and contact your Toyota dealer to request an inspection.

- If the operator leaves the seat, the OPS lamp does not light up.
- Even when the operator re-seats, the OPS lamp does not turn off.

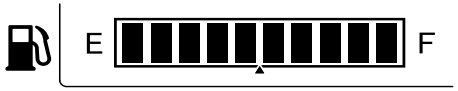

Water temperature gauge

Indicates the temperature of the engine coolant.

1. This gauge functions with the ignition switch ON, and displays the coolant water temperature from left to right in a 10-stage gradation scale.
2. The operator will be notified when the water temperature is 115ºC or over (above 8th stage), as the final two stages at far right begin blinking. Again, when the engine protection function activates (for vehicles with Multifunction display: Option), the entire gauge will start blinking to inform the operator.
3. Temporary overheating may be caused by coolant leakage, low engine coolant level, loosened fan belt, or other problem in the cooling system. Contact your Toyota dealer to request an inspection.

Fuel gauge
(Excluding LPG models)

Indicates the amount of remaining fuel in the fuel tank in terms of a 10-stage gradation scale. The operator will be notified that remaining fuel level is low when the two stages at far left start blinking.
It takes some time for the indication to be stabilized after refuelling and the ignition switch is turned to ON.

Note:

- **If the operating area is not level, attention must be paid because the correct level may not be indicated.**
- **When the gauge begins blinking, refuel as soon as possible.**
- **In case of diesel engine, be sure to refuel it before it runs out because when this occurs it becomes necessary to bleed air from the fuel supply system.**

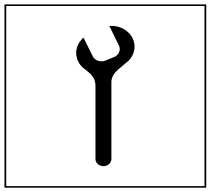

Diagnosis lamp

If an abnormality is registered by the SAS, OPS, mini lever, or Auto speed control, the respective lamps will light up or blink to inform the operator and the diagnosis error code will be displayed in the hour meter display area.
If the following conditions occur to the lamp, there may be a system abnormality. Contact your Toyota dealer to request an inspection.

- The lamp does not light up when the ignition switch is turned ON.
- The lamp lights up when ignition switch is turned ON and stays ON.
- The lamp blinks during ignition switch is turned ON.

⚠ **Caution**

- **Continuing to use the vehicle while the diagnosis lamp is lighted or blinking may lead to a breakdown. When the lamp lights up or blinks, halt all operations and park the vehicle in a safe location. Contact your Toyota dealer to request an inspection. (In the case of diesel engine vehicles, the diagnosis lamp may light up during engine warm-up after a cold-start, but does not indicate an abnormality.)**
- **If the operator remains seated for a long period with the ignition switch turned to OFF, the next time the ignition switch is turned to ON, the diagnosis lamp may start blinking. If this occurs, leave the seat. The diagnosis lamp will then turn off.**

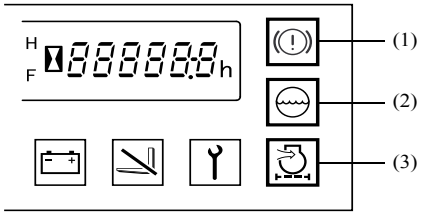

(1) Brake warning lamp
(2) Coolant level warning lamp
(3) Air cleaner warning lamp

OK monitor (Option)

Senses the engine coolant level, brake fluid level, clogged air cleaner element and parking brake status. The lamp comes on to indicate a problem. If the lamp comes on when the ignition switch is on (irrespective of the engine speed), the corresponding part may be abnormal. Contact your Toyota dealer to request an inspection.

⚠ **Caution**

Always perform pre-operation checks. Do not rely on the OK monitor, even if it is not lit.

Brake warning lamp

When the parking brake is engaged or brake liquid is low, the warning lamp will light up to notify the operator.

1. The warning lamp will light up when the parking brake is engaged. After disengaging the brake to operate the vehicle, check to make sure the warning lamp has turned off.
2. The lamp will light up to notify the operator when the brake oil is low.

⚠ **Caution**

- **If the warning lamp does not turn off when the parking brake is disengaged, the brake fluid may be low. Inspect the brake fluid level and replenish it if necessary.**
- **If the warning lamp remains a lighted even if the brake fluid level is sufficient, contact your Toyota dealer to request an inspection.**

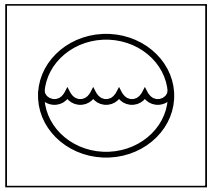

Coolant level warning lamp

1. When the coolant level of the radiator reserve tank becomes low, the indicator lamp will light up to notify the operator.
2. If the lamp lights up while the engine is running, this may indicate a deficiency in coolant. Stop the engine and inspect the coolant level in the radiator reserve tank and the radiator. Before checking coolant level in the radiator wait for it to cool as it maybe under pressure when hot.

Note:
Even if the coolant level warning lamp is not lighted, always inspect the coolant level before starting operations.

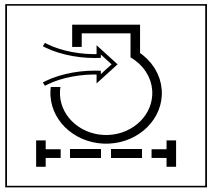

Air cleaner warning lamp

1. This lamp comes on when the air cleaner element gets clogged while engine is running.
2. If normal, the lamp comes on when the ignition switch is turned to ON and goes off when the engine starts.
3. If the lamp comes on while the engine is running, stop operations and park the vehicle in a safe location, stop the engine and clean the element and dust cup. For the cleaning method, refer to the Weekly Inspection Section in this manual.

MULTIFUNCTION DISPLAY (OPTION)

(Multifunction display)
(Multifunction display DX)

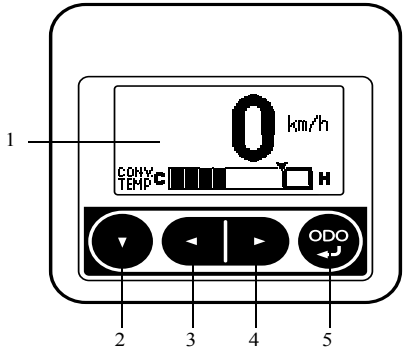

(Multifunction display DX:
Vehicles with Auto speed control)

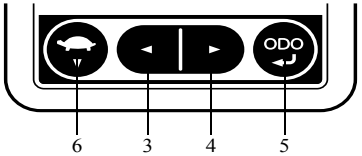

1. Multifunction display area
2. Down switch
3. Left switch
4. Right switch
5. Meter display switch
6. Low speed setting switch (Only for DX models with Auto speed control)

en

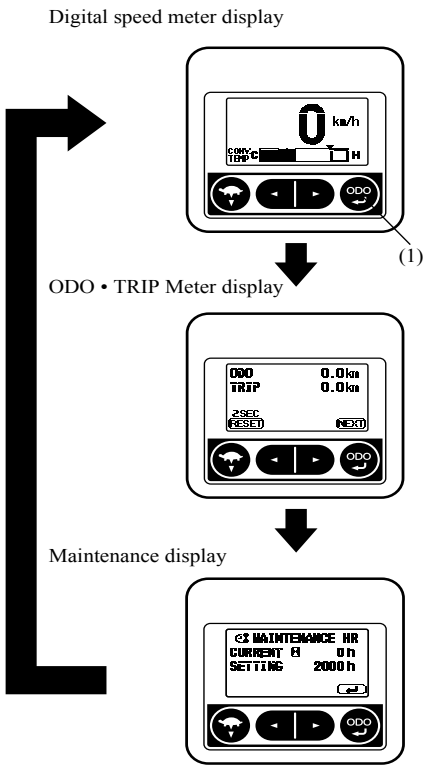

(1) Meter display switch

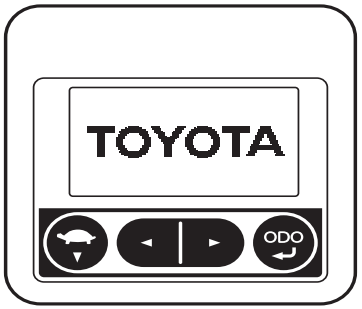

DISPLAY SCREEN TABLE

From the standard screen display, pressing the meter display switch will change the display between ODO, TRIP, and Maintenance Hour Meter display screens.

Note:

Always operate the switch panel with your finger tips and when the vehicle is stopped.

Start screen

When the ignition switch is turned to ON, the start screen will appear for 1 second.

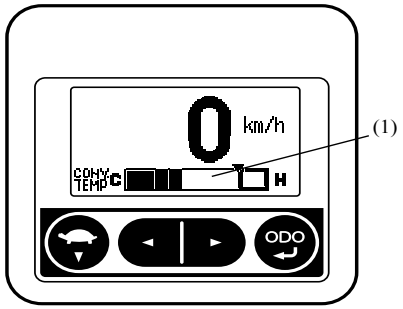

(1) Torque converter oil temperature gauge

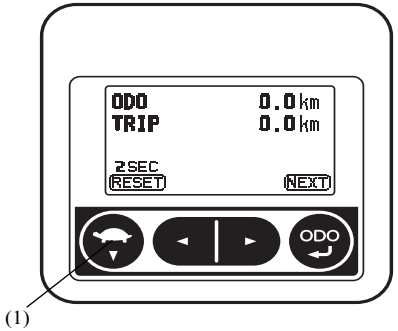

(1) Low speed setting switch or down switch

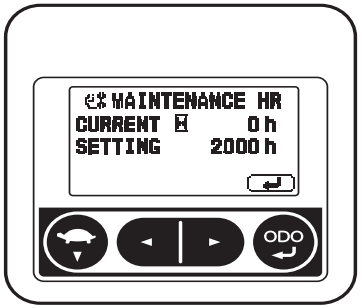

Standard screen

Vehicle speed is digitally indicated in km/h at the top of the screen. At the bottom of the screen, torque converter oil temperature is indicated in a 10-stage level.

ODO • TRIP meter

ODO..... Displays the total distance traveled.
TRIP..... After resetting this function, displays the total distance traveled until now.

Note:

- Pressing the low speed setting switch (DX models with Auto speed control) or the down switch for more than 2 seconds will reset the total travel distance.
- Always operate the switch panel with your finger tips and when the vehicle is stopped.

Maintenance hour meter

Displays the set value and current value of the maintenance hour meter.
CURRENT.....Displays the current time.
SETTING.....Displays the maintenance hour time setting.
The maintenance hour meter time setting can be set between 10-2000 hours. 10-200 hours setting can be set in 10 hour intervals, and 200-2000 hours setting can be set in 50 hour intervals.

Note:

To change the time setting, consult your supervisor or Toyota dealer.

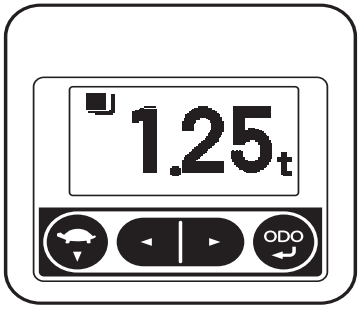

Load meter
(Only with DX models)

Pressing the lift lever knob switch or the load meter switch (mini lever models) will allow the operator to confirm the weight of the load being handled.

Note:
In the case of joy stick models (Option), the load meter switch and fork automatic leveling control switch functions are combined.

1. Adjust the load to a height of 500mm above ground level and set the mast vertical.
2. In the standard screen, press the lift lever knob switch or the load meter switch (mini lever models).

Note:
- For each operation, the meter reading will display for 3 seconds. (the display will remain indicated while the switch is held down).
- Pressing the lift lever knob switch or the load meter switch (mini lever models) while the vehicle is traveling will not display the load display screen.
- If the load is less than 100kg, the meter will indicate 0.00t.

⚠ **Caution**
This function should be used as reference when conducting handling operations, and not used in business dealings or as proof.

Load meter error display

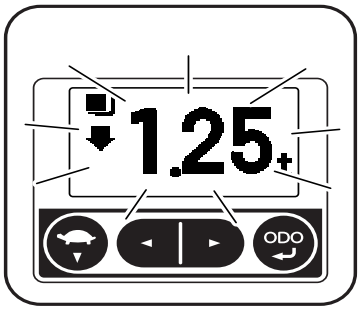

When the load meter is operated while the load is in an elevated position, an arrow will appear at screen left and the measured weight indication will blink to notify the operator that the reading is inaccurate.

To measure the load, always set the load to a height of approximately 500mm above ground and set the mast vertical.

Note:
If 0 is slightly deviated toward the minus side, the display will indicate -0.00 t.

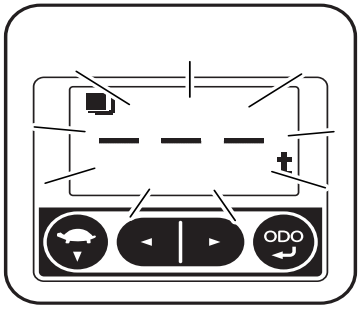

Load meter sensor error display

When the load meter sensor malfunctions, the display will blink as indicated in the diagram at left.

Note:
When the load meter sensor blinks to indicate an error, contact your Toyota dealer to request an inspection.

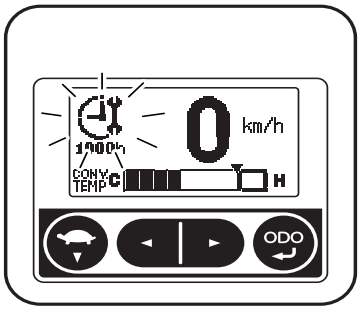

Maintenance indicator

When the preset maintenance time occurs, the operator will be notified through the display and a warning sound. Conduct necessary maintenance.

Note:
The maintenance time setting should be determined by the supervisor. For information on setting the maintenance time, contact your supervisor or Toyota dealer.

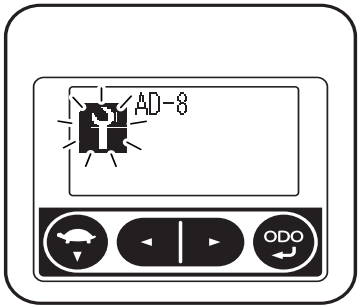

Diagnosis indicator

If an abnormality is registered within the Multifunction display, the operator is notified through a warning sound together with diagnosis error content display.

Note:
- The error code display will be different depending on the abnormal area and nature of the abnormality. There are also occasions when the error is not indicated depending on the area of abnormality.
- When the diagnosis indicator is displayed, contact your Toyota dealer to request an inspection.

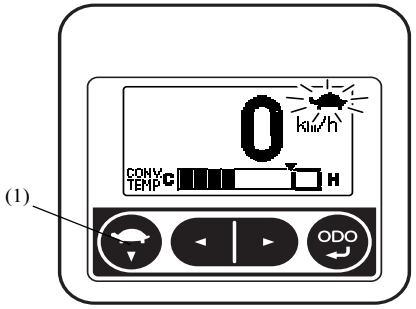

(1) Low speed setting switch

Low speed setting indicator
(Only for DX models with Auto speed control)

When low speed settings have been set, the turtle mark is displayed.
Each time the low speed setting switch is pressed, the turtle indicator will light up. When the indicator is lighted, the low speed setting control is active.

Note:
Always operate the switch panel with your finger tips.

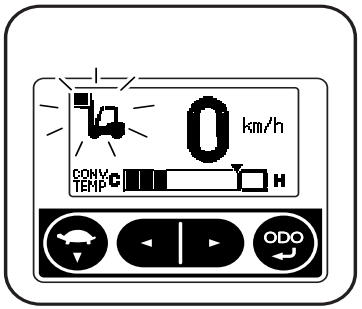

Auto speed control indicator
(Only for DX models with Auto speed control)

When the load height and weight sensors to prevent sudden acceleration or the speed limits after load lifting height and weight sensing are in operation, the auto speed control indicator is displayed to inform the operator.

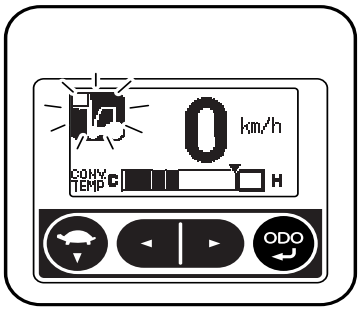

Function on/off indicator
(Only for DX models with Auto speed control)

Even when the speed limits after load lifting height and weight sensing is deactivated, the operator is notified via display indication that the preventing sudden starts function is active.

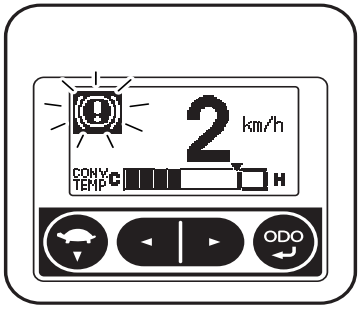

Parking brake on warning

When the parking brake is engaged while the lift vehicle is traveling, the warning indicator will blink and a warning will sound to notify the operator.

⚠ **Caution**

- **If the vehicle is operated without disengaging the parking brake, the brake will lose effectiveness. Contact your Toyota dealer to request an inspection.**
- **If the indicator lamp does not turn off even when the parking brake is disengaged, stop operations and contact your Toyota dealer to request inspection.**

Parking brake off warning

When the ignition switch is turned to OFF or the operator leaves the seat while the parking brake is disengaged, a warning sound will warn the operator to apply the parking brake. The warning will also be sounded if the operator returns to the normal seated position and turns the ignition switch to ON while the parking brake is disengaged.

Note:
- When the parking brake is applied, the warning sound will stop.
- When leaving the driver's seat, always shift to NEUTRAL, set the parking brake, lower the forks, and tilt forward so the tips will not trip pedestrians, and turn off the ignition switch.

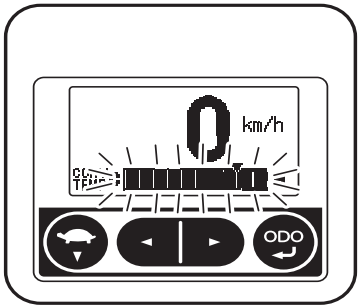

Torque converter oil temperature overheating warning

When the torque converter oil temperature reaches level 9 on the indicator (120ºC or over), the indicator will blink to notify the operator. When the indicator reaches level 10 (140ºC or over), the entire indicator will blink to notify the operator.

Note:
When the warning lamp blinks, park the vehicle in a safe location, engage the parking brake, open the engine hood with the motor idling, to assist in the cooling of the torque converter oil.

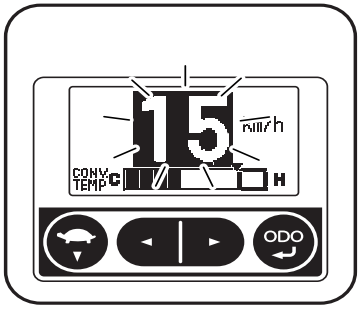

Over-speed alarm
(Only for DX models)

When the set traveling speed is exceeded, the speed meter will blink and a warning will sound to notify the operator.

Note:
This function does not limit traveling speed and is an indication only. Pay attention to your speed when operating the vehicle.

Setting menu screen

With the Multifunction display, pressing the low speed setting switch or the down switch in the standard screen for more than 2 seconds will display the setting menu screen.

Note:
When the supervisor locks the menu, these screen settings can not be displayed.

Selecting the options using the low speed setting switch or the down switch and then pressing the meter display switch will display each screen setting.
Select [⮌ END] in the setting menu screen, and then pressing the meter display switch will return to the standard screen.

Note:
Always operate the switch panel using your finger tips.

Vehicles having Multifunction display DX

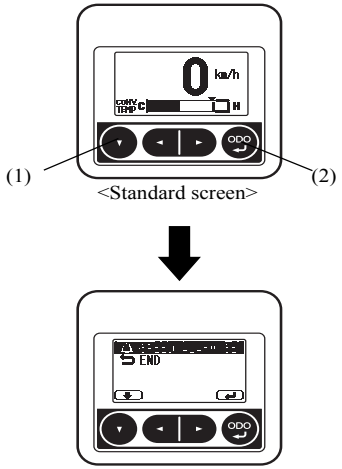

<Standard screen>

<Setting menu screen>

<Over-speed alarm setting screen>

(1) Down switch
(2) Meter display switch

Vehicles with Auto speed control and Multifunction display DX

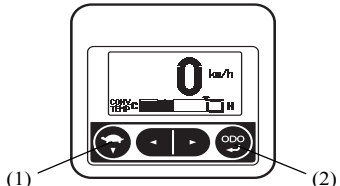

<Standard screen>

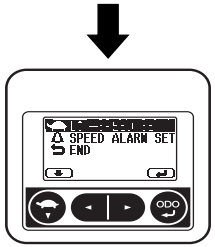

<Setting menu screen>

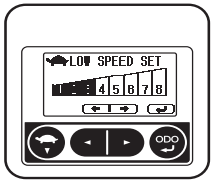

<Low speed setting screen>

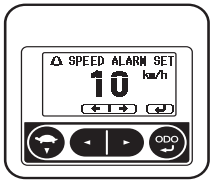

<Over-speed alarm setting screen>

(1) Low speed setting switch
(2) Meter display switch

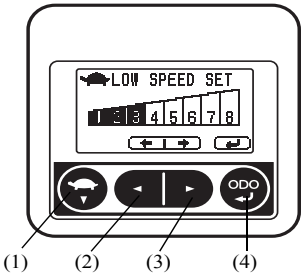

(1) Low speed setting switch
(2) Left switch
(3) Right switch
(4) Meter display switch

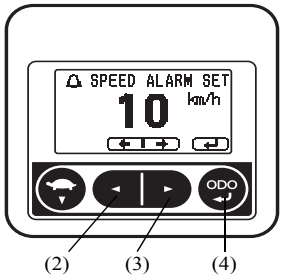

(2) Left switch
(3) Right switch
(4) Meter display switch

Low speed setting screen

When the low speed settings are activated, a range of 8 maximum speed settings can be established.
Selecting the level 8 setting will turn off the function.

Left switch ..... Decreases the setting level

Right switch .....Increases the setting level

Meter display switch..... Switches to the menu screen

Note:

- If level 8 is selected, the setting cannot be changed by pressing the low speed setting switch or the down switch in the standard screen.
- Always operate the switch panel using your finger tips.

Over-speed alarm setting screen

This function allows you to set the traveling speed which will set off the alarm.

Left switch ..... Reduces travel speed

Right switch .....Increases travel speed

Meter display switch..... Switches to the menu screen

Note:

Always operate the switch panel using your finger tips.

SWITCHES AND LEVERS

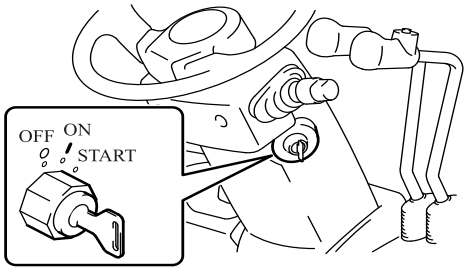

Ignition switch

○ [OFF] ..... Engine stop position. Key insertion and withdrawal are performed in this position.

I [ON]..... Engine operation position. Located one position clockwise from ○ [OFF] position.

The intake heater is preheated before starting in the diesel models.

START ..... Engine, start position. Located one position clockwise from the I [ON] position.

After the engine starts, release the key and it will return to the I [ON] position automatically. In the torque converter model, the engine does not start unless the control lever is set in the neutral position.

⚠ **Caution**

- **Never operate the ignition switch without first sitting on the seat. Otherwise, the forklift could start to move uncontrolled, causing an accident.**
- **When the OPS lamp is on, return each lever to the neutral position and sit on the seat.**
  Then confirm that the lamp has gone off.
- **Do not leave the switch in the [ON] position when the engine is stopped. It may cause over discharge of the battery.**
- **Do not turn the switch to the START position while the engine is running.**
- **For the sake of safety it is recommended to always start the engine of a vehicle with the transmission gear shift lever shifted in the neutral position.**
- **Do not operate the starter motor for more than 30 seconds continuously. Return the switch to the [OFF] position and wait at least 30 seconds prior to attempting restart.**
- **In case of the anti-restart ignition switch (optionally available), be sure to shift the switch to the [OFF] position before attempting to start the engine again.**
- **With the ignition switch OFF (engine off), the forks will not lower even if the lift lever is operated. However, if you sit in the seat and turn on the ignition switch, you can lower the forks. (Except mini lever models) Do not operate the lift lever before getting on the vehicle and starting up the engine. (key-off, lift locked)**
- **If the diagnosis lamp does not go off even when the operator sits on the seat, the battery power may be low. In such a case, do not drive the vehicle until the lamp goes off, otherwise the vehicle may not operate correctly. If you are obliged to drive the vehicle, do so with the utmost care. Also, stop driving and ask a Toyota dealer for inspection if the lamp does not go off 1-2 minutes after the engine starts, or when you race the engine for a while. (For diesel vehicles, the diagnosis lamp may be on for a while to warm up the engine after cold starting. This is, however, not an engine malfunction or failure.)**

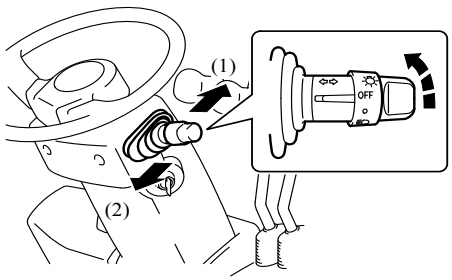

(1) Left turn

(2) Right turn

Integrated light and turn signal switch

This two-position switch serves as both a light switch and turn signal switch.

Light control switch

Irrespective of a ignition switch position, this switch allows you to turn on and off the lights. This switch has two positions. With the switch at each position, the light comes on as shown below.

Lamp name	Step 1	Step 2
Head lamps	–	○
Side clearance lamps, tail lamps (Option)	○	○
Meter illumination lamp	○	○

⚠ **Caution**

Do not keep lights such as head lights on for a long period when the engine is stopped. It may cause over discharge of the battery and make engine starting impossible.

Turn signal switch

Makes the turn signal lamps blink

Left turn ..... Push forward

Right turn ..... Pull backward

The signal switch will operate when the ignition switch is ON.
The turn signal lever returns automatically to the original position after making a direction change.

Control lever

Lever for shifting between forward and reverse.

Forward ..... Push forward

Reverse..... Pull backward

The neutral position is halfway between the forward and reverse position.

Note:
After the OPS System operates, return the accelerator pedal to its fully released position and set the control lever to the neutral position, and sit on the seat to restart driving. (Even though the operator sits on the seat, driving is impossible unless the control lever is in the neutral position.)

⚠ **Caution**

The engine cannot be started unless the control lever is in the neutral position.
Stop the vehicle before shifting between forward and reverse direction.

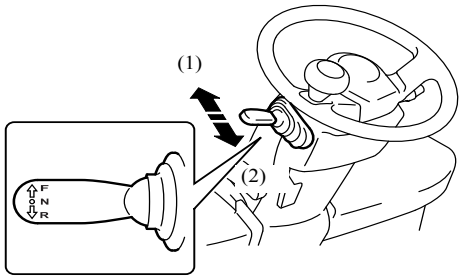

(1) Forward
(2) Reverse

Torque converter interlock function (Option)

If you switch the control lever direction to something other than the current travel direction while moving at high speed, this function electrically disengages the drive and sets the torque converter to neutral. Once the speed drops below the set speed while running in neutral, the travel direction is automatically switched.
To change travel direction, operate the control lever after travel speed is reduced sufficiently.
Ask your Toyota dealer for changing speed setting.

⚠ **Caution**

- **When the interlock has engaged, release the accelerator pedal and use the brake pedal to reduce speed. After the vehicle has stopped moving, slowly press the accelerator pedal down to start moving again. Disengaging the interlock while the accelerator pedal is pressed down could result in wheel spin.**
- **Do not perform Forward or Backward operation on slopes. If control lever is operated on a down slope, torque converter interlock function may not operate correctly.**

Horn button

Press the button in the center of the steering wheel to sound the horn.
The horn will sound even when the ignition switch is OFF.

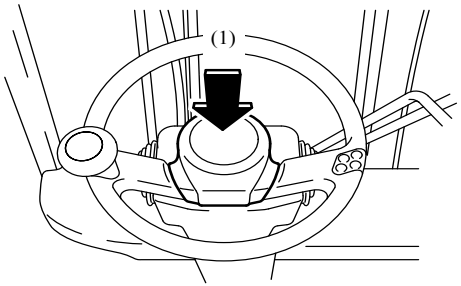

(1) Push

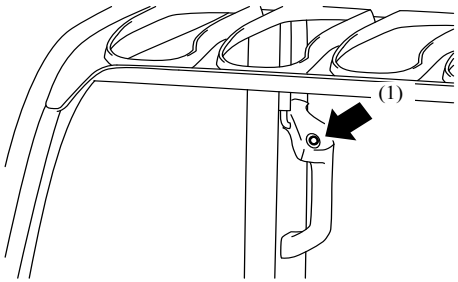

(1) Push

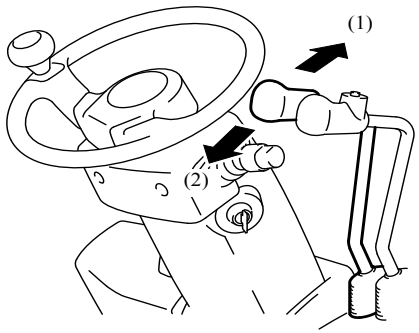

(1) Lower
(2) Raise

Horn button (Option)

The horn will sound when the button at the top of the rear pillar assist grip is pressed. Use this horn when backing up.
The horn will sound even when the ignition switch is OFF.

Lift lever

Raises and lowers the forks.
Raise.....Pull backward
Lower..... Push forward
The lifting speed can be adjusted by how far the accelerator pedal is depressed and how far the lever is pull back.
The lowering speed can be adjusted only by how far the lever is pushed forward.

Note:
The idling lifting speed increase function (Option) automatically increases lifting speed by engaging the lift lever.

⚠ **Caution**

- **After the OPS System operates, return the accelerator pedal to its fully released position and set the lift lever to the neutral position, and sit on the seat to restart the operation. (If you sit on the seat while raising the lift lever, the forks will start to move 1 second later.)**
- **If you sit on the seat while lowering the lift lever, the forks will not lower due to the return to neutral function.**
- **Always operate the lift lever while correctly seated.**
- **When the ignition switch is turned to OFF and lowering the lift lever, the forks will not lower. However, if the operator sits in the normal seated position then the ignition switch is turned to ON, the forks will be lower even if the engine is off. (Except mini-lever/joy stick models)**

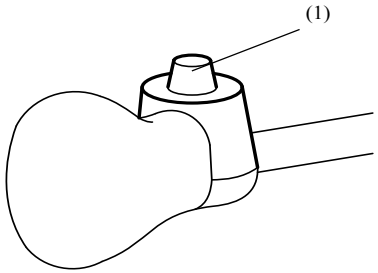

(1) Lift lever knob switch

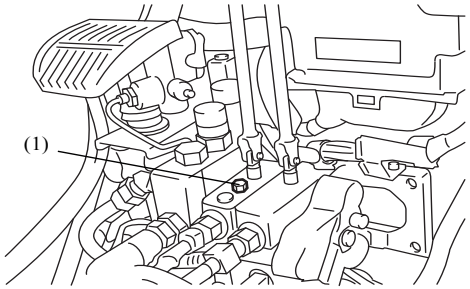

(1) Lift lock release bolt

Lift lever knob switch (Option)

For vehicles with Multifunction display DX (Option), pressing the lift lever knob switch will display the weight of load.

Note:

- Operate this function when you are not performing loading operations.
- When weighing the load, always remember to position the load at a height of about 500mm above the ground and make the mast perpendicular.

Key-lift interlock

When the ignition switch is OFF, the lift will not descend even if the lift lever is lowered. However, if the operator sits properly in the seat and turns the ignition switch ON, the forks can be lowered even if the engine is off (Except mini lever/joy stick models).
If the ignition switch cannot be turned ON for whatever reason, loosen the manual lowering valve located on the oil control valve beneath the toe board, and operate the lift lever in the downward direction.

Note:
Once the forks have been lowered with the lift lock release bolt, close and lock the valve.

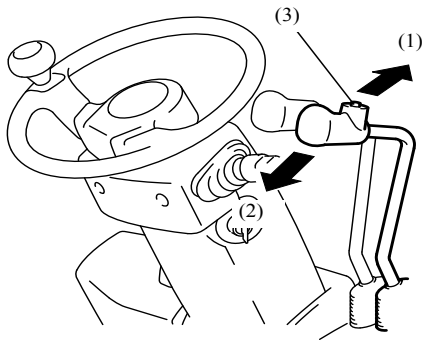

(1) Forward tilting
(2) Backward tilting
(3) Tilt lever knob switch

Tilt lever

Tilts the mast forward and backward.
Forward ..... Push forward
Backward..... Pull backward
The forward or backward tilting speed can be adjusted by the degrees of accelerator pedal depression and lever operating stroke.

⚠ **Caution**

- **Insure the load-handling control levers are in their neutral positions before returning to the operator's seat, if not load-handling functions will start movement 1 second after operator returns to the seat.**
- **Always operate the tilt lever from a seated position.**
- **After the OPS System operates, return the accelerator pedal to its fully released position and the tilt lever to the neutral position, and sit on the seat to restart the operation. (If the operator sits on the seat without returning the load-handling control levers to their neutral positions, load-handling functions will start movement 1 second after.)**

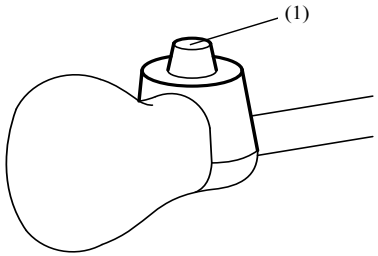

(1) Tilt lever knob switch

Tilt lever knob switch

Depressing the tilt lever knob switch while changing from backward to forward tilt will automatically stop forks at their horizontal position.
It is also possible to slow down the backward tilt speed at a low lift height by depressing knob switch.

Automatic forks leveling control

With the forks positioned at backward tilt, use the lever to tilt the forks forward while depressing the tilt lever knob. Then, the mast will be automatically stopped with the forks horizontally positioned.

Motion upon change of tilt from backward to forward, with tilt lever knob switch pressed:

	Not loaded	Loaded
High lift	Forks stopped at its horizontal position (with mast vertically positioned)	No forward tilt
Low lift	Forks stopped at its horizontal position (with mast vertically positioned)	

Active mast rear tilt speed control

At a high lift height, the mast has a backward tilt speed controller (slow down) irrespective of the load. When lowering from a high lift height to a lower lift height while tilting the mast backward, the control speed will not change.
At a low lift height, the mast can be tilted at full speed even if there is a load. If the mast is tilted backward at a low lift height with the tilt knob switch pressed, the mast has the backward tilt speed controlled (slowed down) as long as the tilt lever knob switch is pressed.
When the fork enters the upper lift height stage from the lower one, the rear tilt speed will be restrained as long as the automatic fork leveling control switch is depressed. If the switch is not depressed, the fully open speed will be applied.

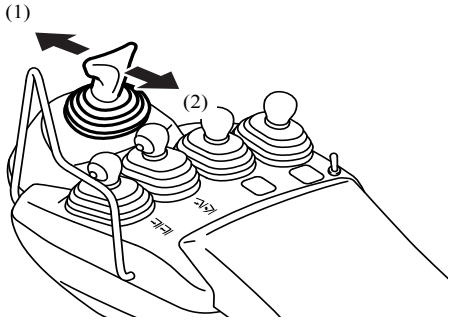

(1) Forward
(2) Backward

Mini lever (Option)

Control lever

Lever for shifting between forward and reverse.
Forward ..... Push forward
Reverse..... Pull backward
The speed of forward and backward traveling can be adjusted by the extent of pressing the accelerator pedal.

Note:
- Stop the vehicle before shifting between forward and backward traveling.
- After the OPS System has been activated, return the accelerator pedal and control lever to their neutral positions and return to the seat before recommencing operations.
- Always operate the control lever from a properly seated position.
- Depending on the vehicle specifications, the position of the control lever may vary.

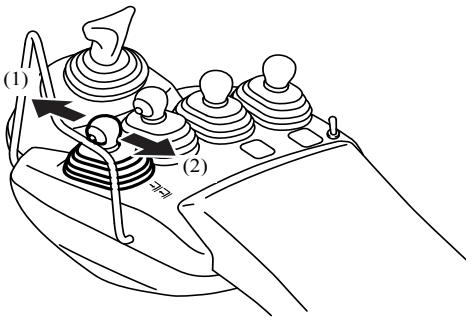

(1) Lower
(2) Raise

Lift lever

Raise and lower the forks for loading.
Raise.....Pull backward
Lower ..... Push forward
Raising speed can be adjusted by the extent of pressing the accelerator pedal and pulling the lift lever.
Lowering speed can be adjusted by the extent of pushing the lift lever.

Note:
- After the OPS System has been activated, return the accelerator pedal and all of the levers to their neutral positions and return to the seat before recommencing operations.
- If you return to the seat while lowering the lift lever, the forks will not descend due to the return to neutral function.
- Always operate the lift lever from a properly seated position.

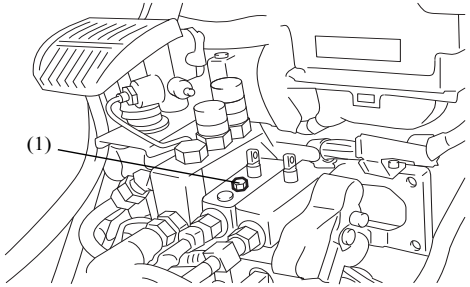

(1) Lift lock release bolt

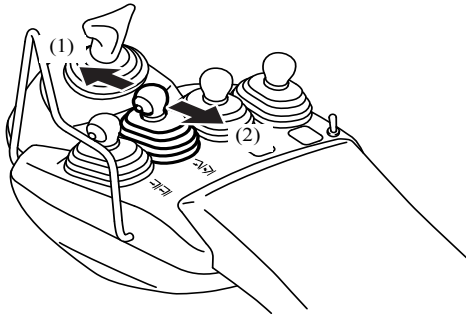

(1) Forward
(2) Backward

Note:
- If you use the idling lifting speed increase function (Option), pulling the lift lever will automatically increase the engine speed and raise the forks at a constant speed without having to step on the accelerator pedal.
- When the ignition switch is turned to OFF, the forks will not descend even if the lift lever is lowered. (Key-lift interlock)
- When the forks will not lower due to system malfunction or other reasons, they can be lowered by opening the lift lock release bolt.
- If you lower the forks by opening the lift lock release bolt, close and lock the bolt.

Tilt lever

Tilt the mast forward and backward.
Forward ..... Push forward
Backward.....Pull backward
Forward or backward tilting speed can be adjusted by the extent of pressing the accelerator pedal and operating the lever.

Note:
- After the OPS System has been activated, return the accelerator pedal and all of the levers to their neutral positions and return to the seat before recommencing operations.
- Always operate the tilt lever from a properly seated position.

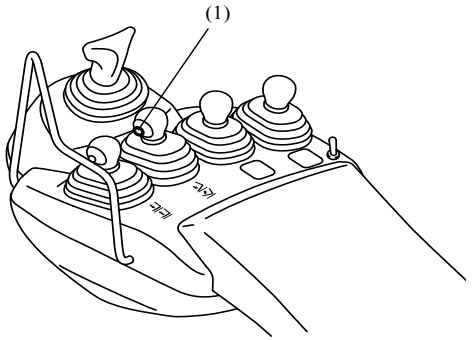

(1) Automatic forks leveling switch

Automatic fork leveling switch (Works same as the tilt lever knob switch.)

While pressing the switch when the forks are tilted forward from a backward-tilted position, or backward from a forward-tilted position, the forks will automatically stop at a horizontal position. Releasing the switch will allow for normal tilt lever operation.

Forks forward-tilt automatic leveling control

When the forks are in a backward-tilted position, operating the lever forward while depressing the automatic fork leveling switch will automatically stop the forks at a horizontal position. This function is convenient when handling loads or attaching/detaching forks.

While depressing the automatic fork leveling switch, operating the forks forward from a backward-tilted position:

	Not loaded	Loaded
High lift	Forks stopped at their horizontal position (with mast vertically positioned)	No forward tilt
Low lift	Forks stopped at their horizontal position (with mast vertically positioned)	

Forks backward-tilt automatic leveling control

When the forks are in a forward-tilted position, operating the lever backward while depressing the automatic fork leveling switch will automatically stop the forks at a horizontal position. This function is convenient when using clamp-type attachments while the mast is tilted forward from the vertical position.

While pressing the automatic forks leveling switch, operating the forks backward from a forward-tilted position:

	Not loaded	Loaded
High lift	Forks stopped at their horizontal position (with mast vertically positioned)	
Low lift		

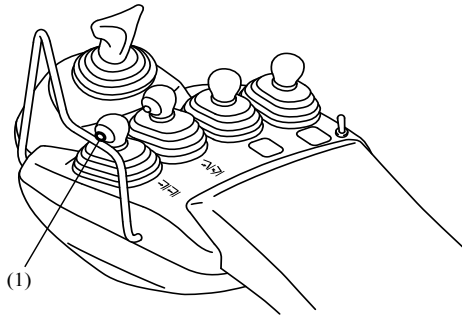

(1) Load meter switch

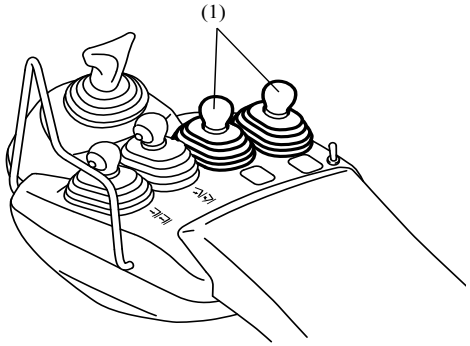

(1) Attachment lever

Active mast rear tilt speed control

When the mast is raised to a high position, backward-tilt speed will automatically slow down.

Load meter switch (Option)

For vehicles equipped with Multifunction display DX (Option), pressing the load meter switch will display the weight of the load.

Note:

- Operate this function when you are not performing loading operations.
- When weighing the load, always remember to position the load at a height of about 500mm above the ground and make the mast perpendicular.

Attachment lever

Operates the attachment.
Attachment speed can be adjusted by the extent of pressing the accelerator pedal and operating the lever.

Note:

- After the OPS System has been activated, return the accelerator pedal and all of the levers to their neutral positions and return to the seat position before recommencing operations.
- Always operate the attachment lever from a properly seated position.

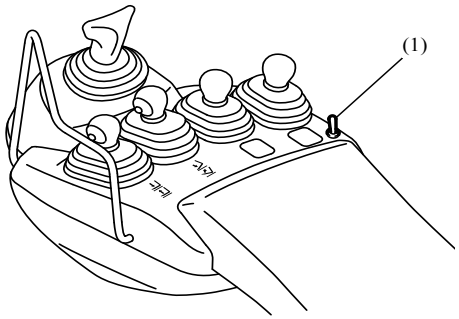

(1) Attachment lever switch

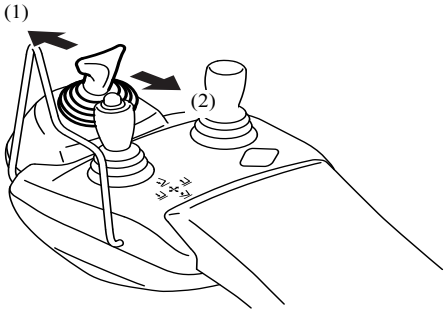

(1) Forward
(2) Backward

Attachment lever switch
(Only for 5 ways series)

This switch allows attachment lever operations to be switched between the 3rd and 4th ways. It is for 3rd operation when the changing-over switch is not switched. And it switches to 5th operation while pushing it.

⚠ **Caution**

Operate the attachment lever switch when attachment operations are stopped.

Joy stick (Option)

Control lever

Lever for shifting between forward and reverse.

Forward ..... Push forward

Reverse..... Pull backward

The speed of forward and backward traveling can be adjusted by the extent of pressing the accelerator pedal.

Note:

- Stop the vehicle before shifting between forward and backward traveling.
- After the OPS System has been activated, return the accelerator pedal and control lever to their neutral positions and return to the seat before recommencing operations.
- Always operate the control lever from a properly seated position.
- Depending on the vehicle specifications, the position of the control lever may vary.

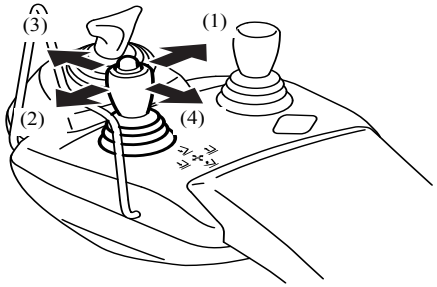

(1) Raising
(2) Lowering
(3) Forward-tilt
(4) Backward-tilt

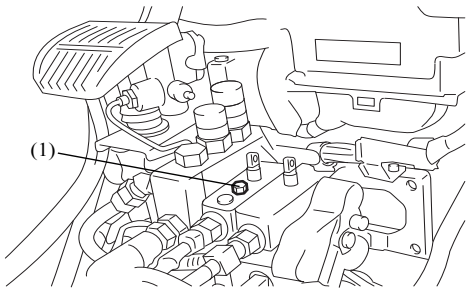

(1) Lift lock release bolt

Lift tilt lever

Operation to the left and right controls lift, and forward and backward operation controls tilt.

Raising .....Operate the lever to the right
Lowering.....Operate the lever to the left
Forward-tilt.....Operate the lever forward
Backward-tilt.....Operate the lever backward

Raising speed and forward and backward-tilt speed can be adjusted by the extent of pressing down on the accelerator pedal and operating the lever.
Lowering speed can be adjusted by operating the lever.

Note:

- Using the idling lifting speed increase function (Option), when the lift tilt lever is raised, the engine's speed is automatically increased without having to press the accelerator pedal, allowing the forks to be raised at a constant speed.
- After the OPS System has been activated, return the accelerator pedal and all of the levers to their neutral positions and return to the seat before recommencing operations.
- If you return to seated position while lowering the lift lever, the lift will not descend due to the return to neutral warning function.
- Always operate the load handling lever from a properly seated position.
- If you use the idling lifting speed increase function (Option), pulling the lift lever will automatically increase the engine speed and raise the forks at a constant speed without having to step on the accelerator pedal.
- When the ignition switch is turned to OFF, the forks will not descend even if the lift lever is lowered. (Key-lift interlock)
- When the forks will not lower due to system malfunction or other reasons, they can be lowered by opening the lift lock release bolt.
- If you lower the forks by opening the lift lock release bolt, close and lock the bolt.

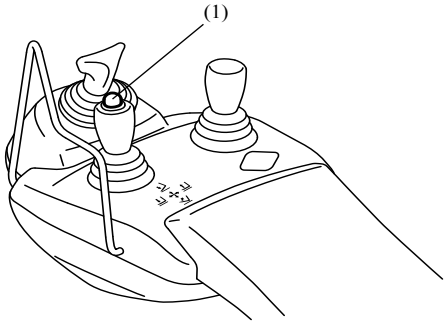

(1) Automatic forks leveling switch

Forks automatic leveling switch

While pressing the switch and the forks are operated forward from a backward-tilted position, or backward from a forward-tilted position, the forks will automatically stop at a horizontal position. Releasing the switch will allow for normal tilt lever operation.

Forks forward-tilt automatic leveling control

When the forks are in a backward-tilted position, operating the lever forward while pressing the automatic forks leveling switch will automatically stop the forks at a horizontal position. This function is convenient when handling loads or attaching/detaching forks.

While pressing the automatic forks leveling switch, operating the forks forward from a backward-tilted position:

	Not loaded	Loaded
High lift	Forks stopped at their horizontal position (with mast vertically positioned)	No forward tilt
Low lift	Forks stopped at their horizontal position (with mast vertically positioned)	

Forks backward-tilt automatic leveling control

When the forks are in a forward-tilted position, operating the lever backward while depressing the automatic fork leveling switch will automatically stop the forks at a horizontal position. This function is convenient when using clamp-type attachments while the mast is tilted forward from the vertical position.

While pressing the automatic forks leveling switch, operating the forks backward from a forward-tilted position:

	Not loaded	Loaded
High lift	Forks stopped at their horizontal position (with mast vertically positioned)	
Low lift		

Active mast rear tilt speed control

When the mast is raised to a high position, backward-tilt speed will automatically slow down.

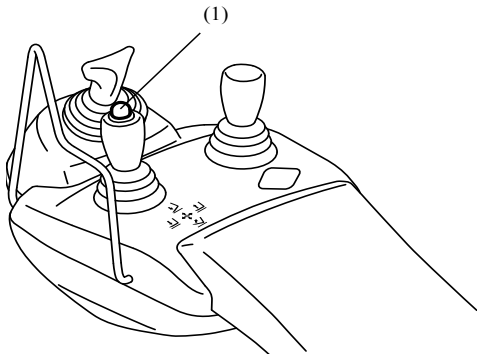

(1) Automatic forks leveling switch

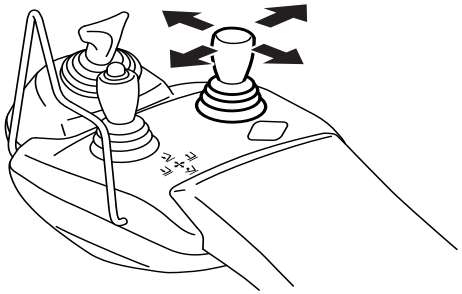

Load meter display

In the case of vehicles with multifunction display DX (Option), pressing the fork automatic leveling switch will display the weight of the load being handled.

Note:

- The load meter switch and fork automatic leveling control switch functions are combined.
- Operate this function when loading is not being conducted.
- When weighing the load, always remember to position the load at a height of about 500mm above the ground and make the mast perpendicular.

Attachment lever

Operates attachment. Attachment speed can be adjusted by the extent of pressing the accelerator pedal and operating the lever.

Note:

- After the OPS System has been activated, return the accelerator pedal and all of the levers to their neutral positions and return to the seat before recommencing operations.
- Operate the attachment lever after you are seated properly in the vehicle.

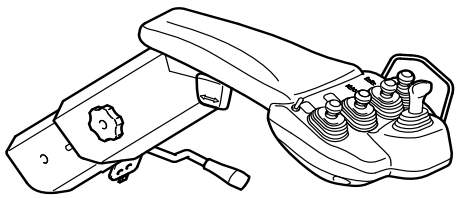

Mini lever models

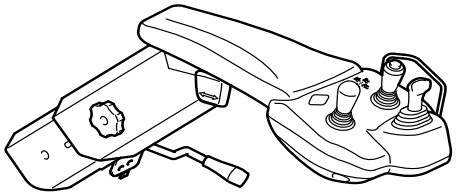

Joy stick models

Arm rest
(Mini lever and Joy stick models)

Before starting up the engine, adjust the arm rest to set the optimum driving position.

⚠ **Caution**

- **After you have finished adjusting the arm rest forward-backward position, height and tilt, confirm that the knob and the lever have been secured in place. A loose knob or lever may cause an accident.**
- **Do not adjust the position of the arm rest while operating the vehicle.**
- **To operate the vehicle in safely, lock the arm rest securely. Before operating the vehicle, always confirm that the lever for turning and securing the arm rest is locked.**

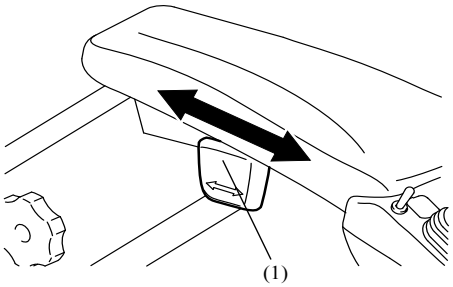

(1) Backward-and-forward position adjustment knob

Adjusting the backward-and-forward position

Pull up and loosen the forward-backward position adjusting knob. Adjust the arm rest forward-backward position. Then press the knob, securing it in place.

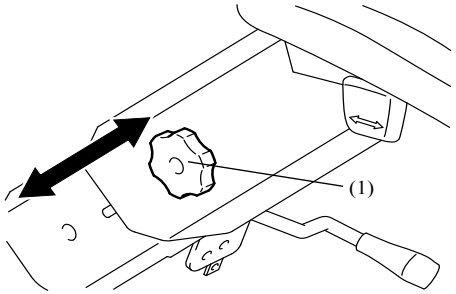

(1) Height adjustment knob

Adjusting the height position

Turn the knob counterlockwise to release the lock.Then, move the arm rest up-and-down to place it to an appropriate position. Turn knob clockwise to lock.

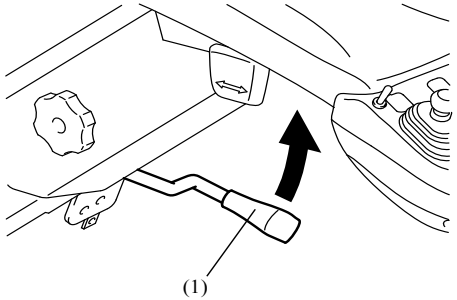

(1) Tilt adjustment lever

Adjusting the tilt position

Lift and loosen the lever for turning and securing the arm rest. Adjust the tilt of the arm rest.Then push the lever down,securing it in place.This lever is used in order to turn the arm rest when you open and close the engine hood.

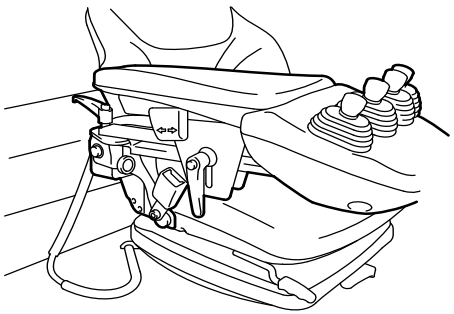

Arm rest
(Mini lever and Joy stick with Premium cabin models)

Before starting up the engine, adjust the arm rest to set the optimum driving position.

⚠ **Caution**

- **After you have finished adjusting the arm rest forward-backward position, height and tilt, confirm that the knob and the lever have been secured in place. a loose knob or lever may cause an accident.**
- **When you adjust the arm rest position, confirm by tightening the knob and lock the arm rest securely. A loose knob may cause an operational error.**
- **Do not adjust the position of the arm rest while operating the vehicle.**
- **To operate the vehicle in safely, lock the arm rest securely. Before operating the vehicle, always confirm that the lever for turning and securing the arm rest is locked.**

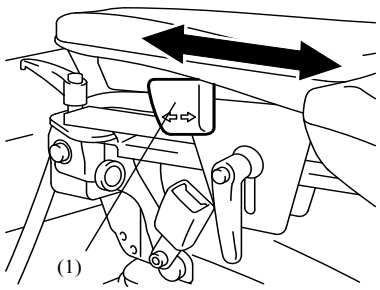

(1) Backward-and-forward position adjustment knob

Adjusting the backward-and-forward position

Pull up and loosen the forward-backward position adjusting knob. Adjust the arm rest forward-backward position. Then press the knob, securing it in place.

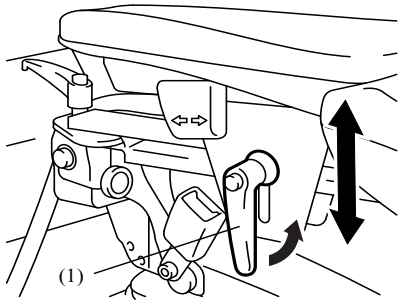

(1) Height adjustment lever

Adjusting the height position

Turn the lever counterclockwise to release the lock. Then, move the arm rest up-and-down to place it to an appropriate position. Turn lever clockwise to lock.

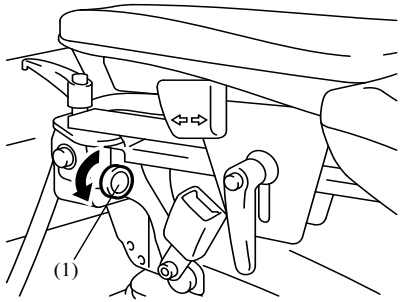

(1) Tilt adjustment knob

Adjusting the tilt position

Lift and loosen the tilt adjustment knob counter clockwise to adjust the tilt of the arm rest. This lever is also used in order to spring up the arm rest.

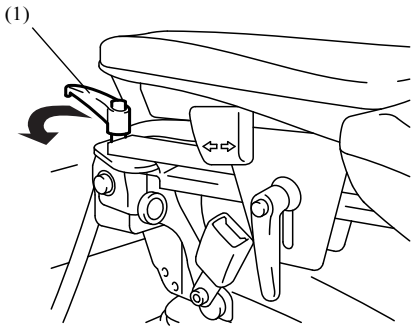

(1) Turning lever

Adjusting the turning position

Lift and loosen the turning lever counter clockwise to turn the arm rest from side to side.
This lever is used in order to turn the arm rest when you open and close the engine hood.

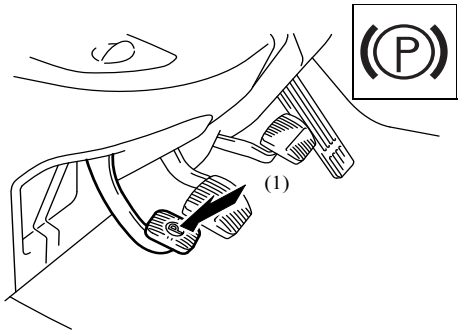

(1) Press down

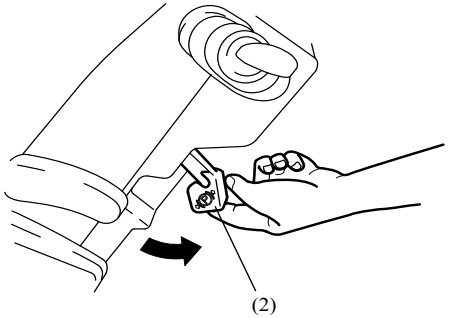

(2) Release lever

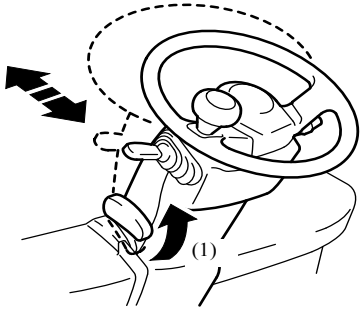

(1) Raised

Parking brake pedal

Use the parking brake pedal when parking or stopping.

1. When engaging the parking brake, while stepping on the brake pedal, fully press down on the parking brake pedal.
2. To disengage the parking brake pedal, while stepping on the brake pedal, pull the release lever toward you.

⚠ **Warning**

- **Before operating the parking brake pedal, step on the brake pedal and always confirm that the vehicle has come to a stop.**
- **When parking on a slope, apply wheel chocks to the wheels.**
- **Traveling without releasing the brake will decrease the brake performance.**

Tilt steering adjustment

1. The steering wheel position may be adjusted back and forth while the tilt steering adjust lever up.
2. Lowering the lever at the proper position fixes the steering wheel at that position.
3. After the adjustment, try to move the steering wheel back and forth to see that it is fixed.

⚠ **Caution**

The steering wheel position must be adjusted before starting the vehicle.
Adjustment during traveling must be avoided.

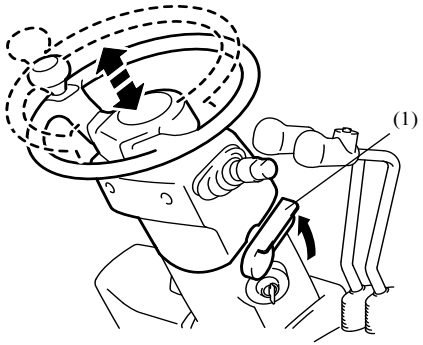

(1) Height adjustment lever

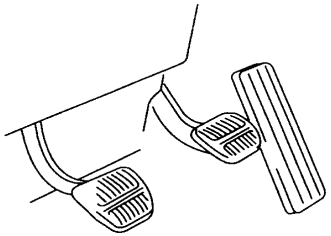

Telescopic steering (Option)

Use the telescopic steering to adjust the height of the steering wheel.

1. Pull up the height adjustment lever
2. Hold the steering wheel with both hands, and adjust the height.
3. Hold the height adjustment lever down at the proper position, and lock the steering wheel securely. The steering wheel will be locked.
4. After you have finished adjusting the steering wheel, move the wheel up and down to confirm that it has been locked securely.

⚠ **Caution**

The steering wheel position must be adjusted before starting the vehicle.
Adjustment during traveling must be avoided.

Pedals

From the right: accelerator pedal, brake pedal and inching pedal.

en

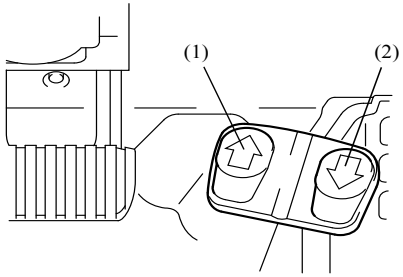

(1) Forward
(2) Backward

D2 pedal (Option)

These pedals are used for foot pedal for travel shifting, and acceleration.

Forward ..... Step on the left side of the pedal.
Backward..... Step on the right side of the pedal.

Each pedal functions as accelerator pedal. Speed is adjustable by depth of depression.

Note:

- Engine can be started only when the parking brake is applied or your foot is off the accelerator pedal.
- When the OPS system is activated, the "stop driving" function can be deactivated by applying the parking brake pedal or taking your foot off the accelerator pedal when you are sitting on the seat.

BODY COMPONENTS

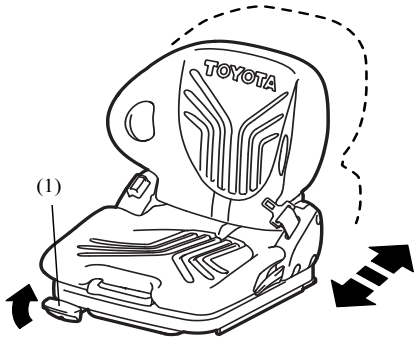

(1) Adjustment lever

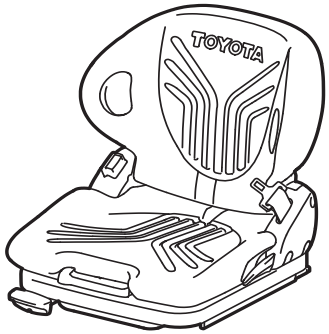

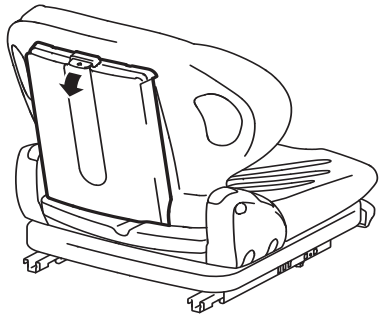

Operator's seat

The operator's seat and seat belt are provided for your safety.
The seat can be moved back and forth for position adjustment while the adjust lever is pulled upward.

⚠ **Caution**

- **Due to the seat switch, the forklift cannot be driven and the forks cannot be raised or lowered unless the operator is sitting on the seat. Therefore, please sit on the seat before attempting to operate the forklift. Moreover, do not operate it with an object placed on the seat.**
- **Do not turn on the seat switch by any method other than sitting on the seat.**

Operator Restraint System

A specially designed operator's seat and seat belt are provided for your safety. Get in the habit of using the seat belt whenever you sit on the vehicles.

⚠ **Caution**

Always adjust your seating position before driving the vehicle.

An operator's manual and operator's manual for safety operation are located on the rear side of the seat. If your vehicle dose not have an operator's manual and operator's manual for safety operation, please contact (your authorized Toyota dealer) to obtain copies for your vehicle.

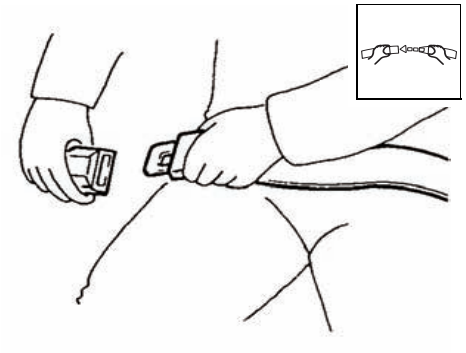

Seat belt

To fasten your seat belt, pull it out of the retractor and insert the tab into the buckle.
You will hear a click when the tab locks into the buckle. Pull on the belt to make sure the buckle is securely latched.
The seat belt length automatically adjusts to your size.

Note:
If your seat belt cannot be pulled out as a locked status, loosen your seat belt after pulling it out strongly, and then pull it out slowly again.

⚠ **Warning**
Always wear your seat belt when driving the vehicle. The vehicle can tip over if operated improperly.
To protect operators from the risk of serious injury or death in the event of a tipover, it is best to be held securely in the seat.
The seat and seat belt will help to keep you safely within the vehicle and operator's compartment.
In the event of a tipover, don't jump, grip the steering wheel, brace your feet, lean away from the direction of tipover, and stay with the vehicle.

⚠ **Warning**
Buckle up. Your seat and seat belt can reduce the risk of serious injury or death in case of a vehicle tipover. You chances for avoiding serious injury or death in a tipover are better if you stay with the vehicle in the operator's compartment.

Disconnecting method

Push the release button and allow the belt to retract.

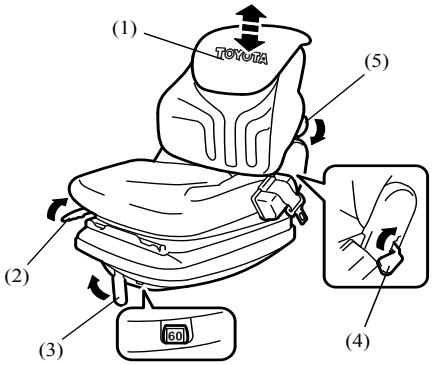

(1) Headrest
(2) Seat adjustment lever
(3) Weight adjustment lever
(4) Recliner adjustment lever
(5) Lumbar adjustment knob

Fabric seat (Option)

⚠ **Caution**
- **Due to the seat switch, the forklift cannot be driven and the forks cannot be raised or lowered unless the operator is sitting on the seat. Therefore, please sit on the seat before attempting to operate the forklift. Moreover, do not operate it with an object placed on the seat.**
- **Do not turn on the seat switch by any method other than sitting on the seat.**

Adjusting the pointer on the weight scale to the operator's weight to obtain the most comfortable suspension matching the operator's weight.
The optimum driving position can be set using the levers.

1. Headrest
   The headrest height can be adjusted by it sliding up and down.
2. Seat adjustment lever
   The seat position can be adjusted either forward or backward while the adjust lever is pulled up.
3. Weight adjustment lever
   Turn the adjust lever clockwise ((+) direction) or counterclockwise ((-) direction) to move the pointer in the direction toward a heavier or lighter weight, respectively.
4. Recliner adjustment lever
   Pull the lever on the left to adjust the seat's angle of recline.
5. Lumbar adjustment knob
   Use this adjust knob to adjust the lumbar support. Turning the adjust knob clockwise ((+) direction) increases the supporting power and counterclockwise ((-) direction) decreases it.

⚠ **Warning**
- **Never adjust your seating position while the vehicle is moving.**
- **Always move the seat to the front position before opening the engine hood to prevent interference with the radiator cover.**

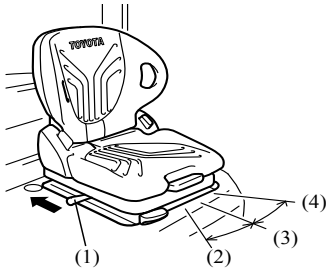

Standard models

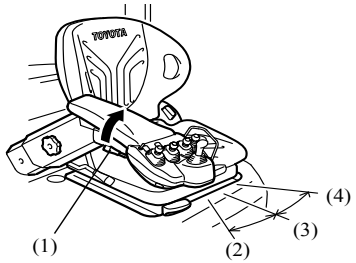

Mini lever/Joy stick models (Option)

(1) Lock release lever
(2) Backing up (Lock included)
(3) Normal traveling (Lock included)
(4) Getting off (No lock)

Swivel seat (Option)

This rotating seat is useful when backing up over long distances or when getting off from the vehicle.

Backing up

(Rotation to the right)

1. For standard models, pull the release lever backward to release the lock.
   For mini lever/joy stick models (Option) pull the lock release lever upward to release the lock.

Note:

Let go of the lock release lever once the seat starts to rotate.

2. Rotate the seat to the right and lock the seat.
3. After backing up, return the seat to normal position.

Getting off from the vehicle

(Rotation to the left)

1. For standard models, pull the lock release lever backward to release the lock.
   For mini lever/joy stick models (Option), pull the lock release lever upward to release the lock.

Note:

Let go of the lock release lever once the seat starts to rotate.

2. Rotate the seat to the left when getting off the vehicle. The seat will not lock into place when dismounting vehicle.

⚠ **Caution**

- **When rotating the seat, be careful not to get your hand caught between the seat and cab.**
- **After using this function, return the seat to normal position and confirm that the seat is locked in place.**
- **While operating the vehicle forward or backward, make sure that the seat is securely locked in a normal operating position.**
- **To prevent accidents, do not rotate the seat while operating the vehicle.**
- **The seat will not lock into place when dismounting the vehicle.**

General Export with suspension specification (Option)

The seat suspension mechanism provides a comfortable seating position according to the weight of the operator. The optimum driving position can be set using the knob and levers.

⚠ **Caution**

- **To prevent an accident, make sure to adjust the seat before operating the vehicle.**
- **In order to prevent an accident, do not adjust the seat while traveling. The seat may suddenly move, interfering with your operation and causing an accident.**
- **Adjust the position of the seat so that you can fully reach all of the pedals while you have your back against the back of the seat.**
- **On OPS models, due to the seat switch, the forklift cannot be driven and the fork cannot be raised or lowered unless the operator is sitting on the seat. Therefore, please sit on the seat before attempting to operate the forklift. Moreover, do not operate it with an object placed on the seat.**
- **On OPS models, do not turn on the seat switch by any method other than sitting on the seat.**

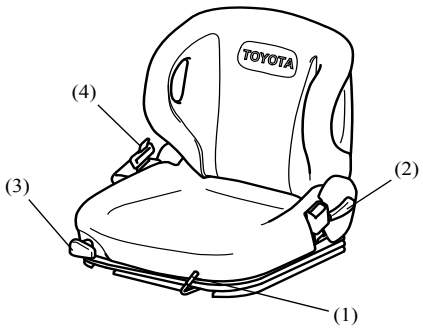

(1) Seat slide lever
(2) Recliner adjust lever (Option)
(3) Weight adjust knob (Option)
(4) Seat belt

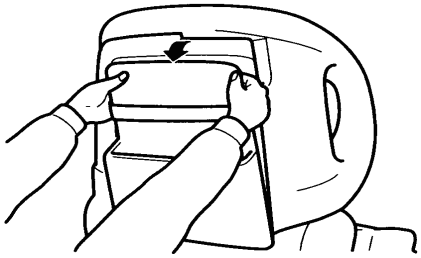

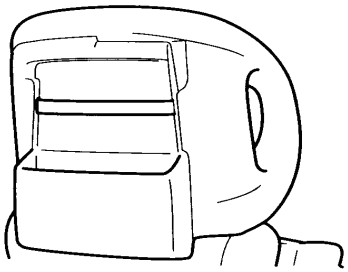

1. Seat slide lever
   Pull the slide lever to the left to adjust the back-and-forth position of the seat. The seat is secured in position when you release the lever.
2. Recliner adjust lever (Option)
   Pull the lever on the left of the seat to adjust the seat's angle of recliner.
3. Weight adjust knob (Option)
   Turn the knob on the right of the seat clockwise to adjust for a heavier body weight. Turn the knob counterclockwise to adjust for a lighter body weight. Adjustment can be made for body weights between 40 kg and 120 kg.

⚠ **Caution**

- **The seat position must be adjusted before starting the vehicle.**
- **After adjustment, lightly shake the seat forward and backward to confirm that the seat is firmly locked in position.**

Pocket

An operator's manual and operator's manual for safety operation are located on the rear side of the seat. Make sure to open the seat back pocket with both hands. If your vehicle does not have an operator's manual and operator's manual for safety operation, please contact (your authorized Toyota dealer) to obtain copies for your vehicle.

Note:
Make sure the pocket is closed securely.

Magazine box

There is a box at the rear of the pocket for small items such as sketch boards and work gloves.
To prevent items in the pocket from falling out when opening and closing the engine hood or driving on bad road surfaces, secure firmly with the belt.

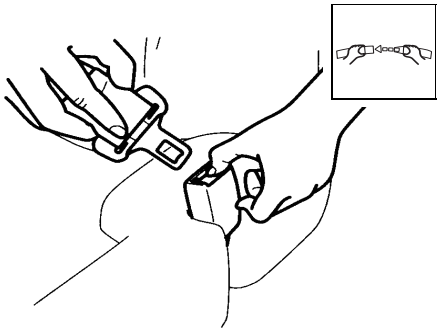

Retractable seat belt

To fasten your seat belt, pull it out of the retractor and insert the tab into the buckle.
You will hear a click when the tab locks into the buckle. Pull on the belt to make sure the buckle is securely latched.
The seat belt length automatically adjusts to your size.

Disconnecting method

Push the release button and allow the belt to retract.

Note:
If the seat belt is locked and cannot be drawn out any further, pull on the belt strongly once, then loosen it, then draw it back out slowly.

⚠ **Warning**

- **Buckle up. Your seat and seat belt can reduce the risk of serious injury or death in case of a vehicle tipover. Your chances for avoiding serious injury or death in a tipover are better if you stay with the vehicle in the operator's compartment.**
- **Always fasten your seat belt when operating the vehicle. The vehicle can be tipped over if operated improperly. To protect operators from the risk of serious injury or death in the event of a tipover, it is best to be held securely in the seat. The seat and seat belt will help to keep you safely within the vehicle and operator's compartment.**
  In the event of a tipover, don't jump, grip the steering wheel, brace your feet, lean away from the direction of tipover, and stay with the vehicle.

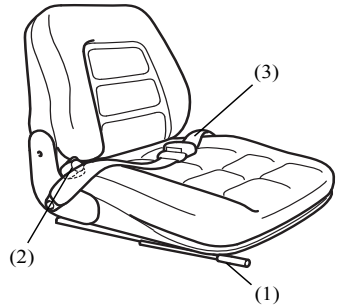

(1) Seat slide lever
(2) Recliner adjust knob
(3) Seat belt

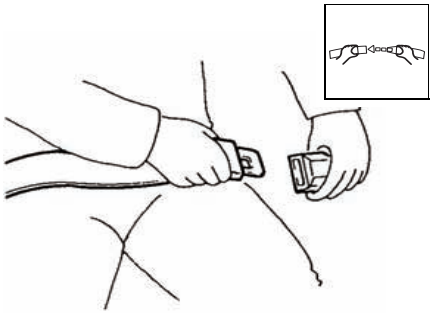

General Export specification seat (Option)

The operator's seat belt is provided for your safety.

1. Seat slide lever
   Pull the slide lever to the right to adjust the back-and-forth position of the seat. The seat is secured in position when you release the lever.
2. Recliner adjust knob
   Turn the knob to adjust the seat's angle of recliner.

   Forward ..... Turn the knob counter-clockwise

   Backward ..... Turn the knob clockwise

⚠ **Caution**

- **The seat position must be adjusted before starting the vehicle.**
- **After adjustment, lightly shake the seat forward and backward to confirm that the seat is firmly locked in position.**

Seat belt

To fasten your seat belt, insert the tab into the buckle.
You will hear a click when the tab locks into the buckle. Pull on the belt to make sure the buckle is securely latched.
Adjust the seat belt length to your size as necessary.

Disconnecting method

Push the release button and pull out the belt from the buckle.

⚠ **Caution**

- **When the operator leaves the seat, insert the seat belt tab into the buckle.**
- **Stop the engine when you open the engine hood.**
- **When you start the engine, fasten the seat belt.**

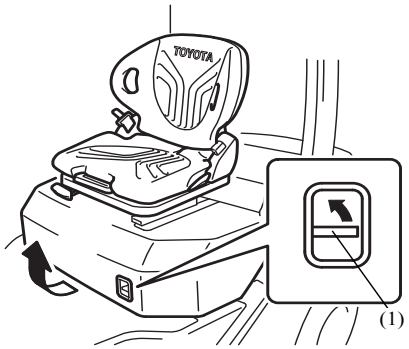

(1) Engine hood lock release lever

⚠ **Warning**

- **Buckle up. Your seat belt can reduce the risk of serious injury or death in case of a vehicle tipover. Your chances for avoiding serious injury or death in a tipover are better if you stay with the vehicle in the operator's compartment.**
- **Always fasten your seat belt when operating the vehicle. The vehicle can be tipped over if operated improperly. To protect operators from the risk of serious injury or death in the event of a tipover, it is best to be held securely in the seat. The seat belt will help to keep you safely within the vehicle and operator's compartment.**
  In the event of a tipover, don't jump, grip the steering wheel, brace your feet, lean away from the direction of tipover, and stay with the vehicle.

Engine hood

Opening

1. Pulling up on the engine hood lock release lever will release the engine hood lock, and the engine hood will pop up slightly.
2. Lift the engine hood.
3. Open the engine hood all the way, then shake the hood slightly to check that the hood damper has been securely fastened before letting go.

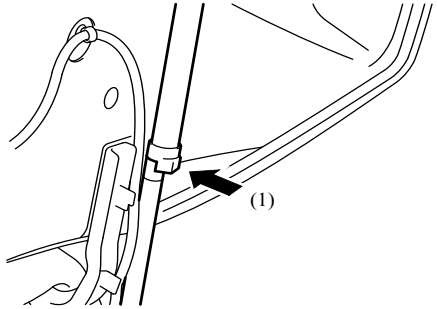

(1) Push

Closing

1. Lift up the engine hood and press the hood damper lock to release the lock.
2. Close the engine hood quietly, and press down on the hood until you hear a clicking sound.

⚠ **Caution**

Working on the engine without firm locking of the hood may be hazardous.

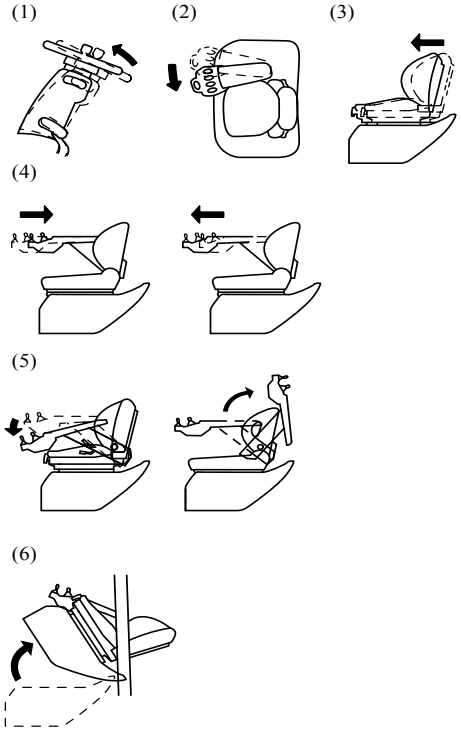

Engine hood
(Mini lever/Joy stick models)

Opening

1. Pull the lock release lever. tilt the steering post forward.
   (Swivel seat models)
2. Loosen the turning lever of the arm rest and turn the arm rest on the inward side.
   (Fabric seat models)
3. Pull up the slide lever and slide the seat to the forward-most position.
   (Mini-lever/joy stick models)
4. Pull up on the arm rest forward-backward angular adjustment knob, and after tilting the arm rests to the backward-most position(Pre-cleana, working lamp models) or to the forward-most position (Fabric seat cabin models), lower the forward-backward angular adjustment knob and lock it in place.
5. Pull up on the arm rest forward-backward angular adjustment lever, and after tilting the arm rests forward, lower the forward-downward angular adjustment lever and again lock it in place.
   (Compact, Cabin, LPG/ Rear pillar assist gripped models)
   Spring up the arm rest and lock it in place.
   (Conventional models other than those above models)
6. Pulling up on the engine hood lock release lever will release the engine hood lock, and the engine hood will pop up slightly.
7. Open the engine hood all the way, then shake the hood slightly to check that the hood damper has been securely fastened before letting go.

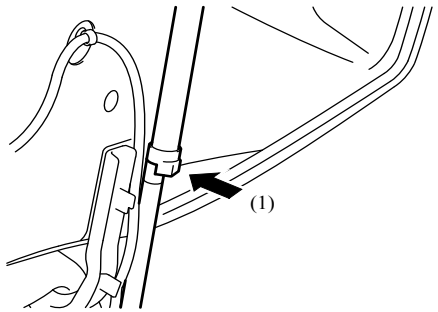

(1) Push

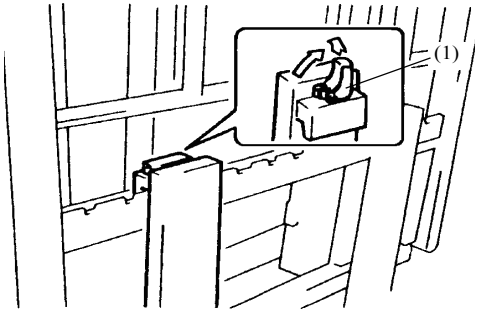

(1) Fork lever

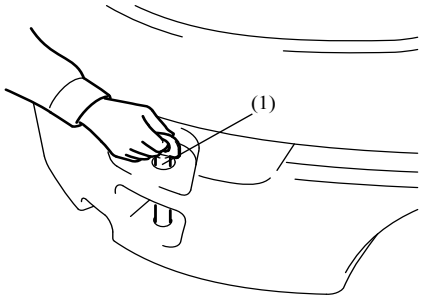

(1) Draw bar

Closing

1. Lift up the engine hood, press the hood damper lock to release the lock.
2. Close the hood quietly, and press down on the hood until you hear a clicking sound.
3. Return the seat and arm rests to their normal position.

⚠ **Caution**

Working on the engine without firm locking of the hood may be hazardous.

Forks

Lift each fork stopper and turn to release so that forks can be shifted left and right.
Adjust the forks in the position most appropriate for the load.
When adjusting the forks, make sure that the center of gravity of the load corresponds to the center of the vehicle. After adjustment, turn the stoppers to lock the fork in place.

⚠ **Warning**

Make the forks are locked before carrying a load.

Draw bar

The draw bar is located at the back of the counterweight, and is used to pull the vehicle should its tires drop into a gutter or become stuck in mud.
It can also be used for loading the forklift onto a vehicle or another vehicle.

⚠ **Caution**

The draw bar should not be used for towing the forklift or for towing another vehicle using the forklift.

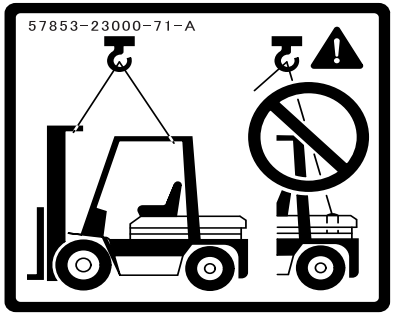

Vehicle hoisting method

When hoisting the vehicle, use the lifting holes near the top of the mast for the front side and the overhead guard for the rear position as shown in the illustration.

⚠ **Caution**

- **Use wire cable which is sufficiently strong.**
- **Never use the holes on the upper side of the counterweight to hoist the vehicle.**

Using the cabin
(Option)

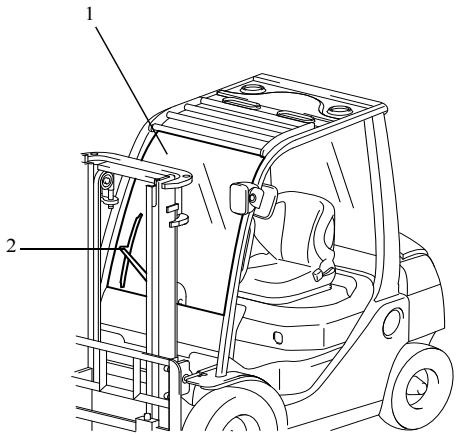

Half cabin models

1. Front glass
2. Front wiper
3. Rear wiper
4. Rear window

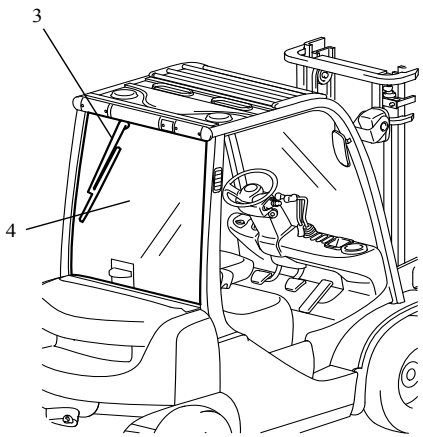

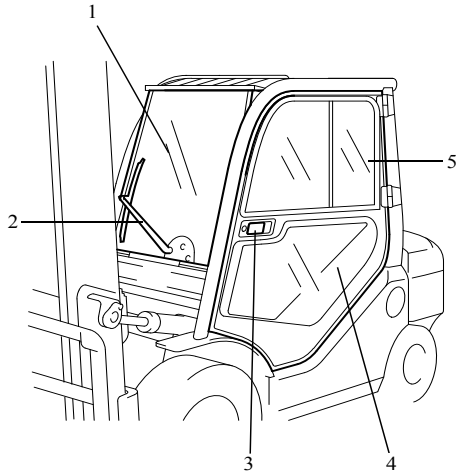

Steel cabin models

1. Front glass
2. Front wiper
3. Door handle
4. Front door
5. Side door window
6. Rear wiper
7. Rear window

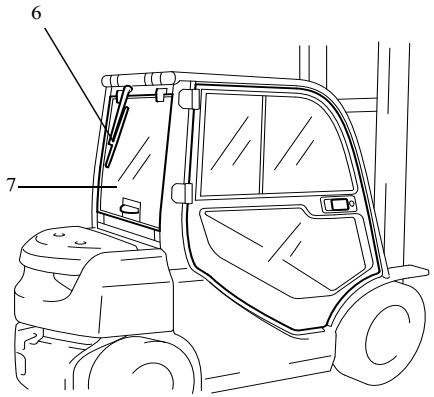

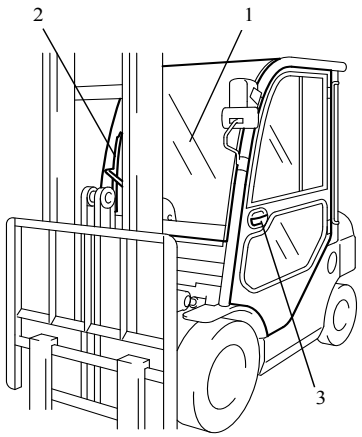

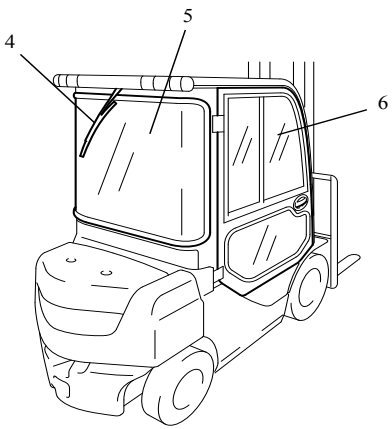

Premium cabin models

1. Front glass
2. Front wiper
3. Door handle
4. Rear wiper
5. Rear window
6. Side door window

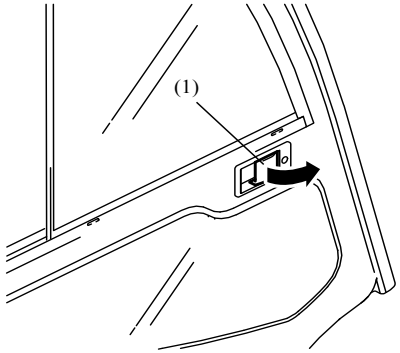

(1) Door handle

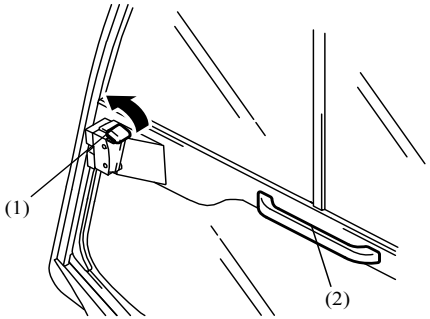

(1) Door inside lever
(2) Door pull handle

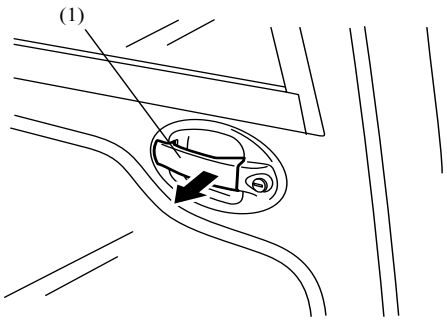

(1) Door handle

Opening/Closing doors
(Steel cabin models)

Outside the vehicle

1. Grasp the door handle and pull toward you to release the lock and open the door.
2. When closing the door, press until the door lock catches.

Note:
To open the engine hood for cabin type models, first open the cabin doors to the right and left.

Inside the vehicle

1. Pushing up the door inside lever toward you will release the lock and open the door.
2. Open the door using the door pull handle.

⚠ **Caution**

- **When opening doors, be aware of pedestrians or other vehicles.**
- **When closing the door, make sure to use the door pull handle. Before operating the vehicle, confirm that the doors are securely shut.**

Opening/Closing doors
(Premium cabin models)

Outside the vehicle

1. Grasp the door handle and pull toward you to release the lock and open the door.
2. When closing the door, press until the door lock catches.

Note:
To open the engine hood for cabin type models, first open the cabin doors to the right and left.

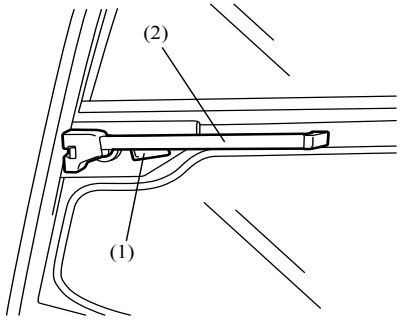

(1) Unlock lever
(2) Door pull handle

Inside the vehicle

Grasp the unlock lever to release the lock. press the door pull handle to open the door.

⚠ **Caution**

- **When opening doors, be aware of pedestrians or other vehicles.**
- **When closing the door, make sure to use the door pull handle. Before operating the vehicle, confirm that the doors are securely shut.**

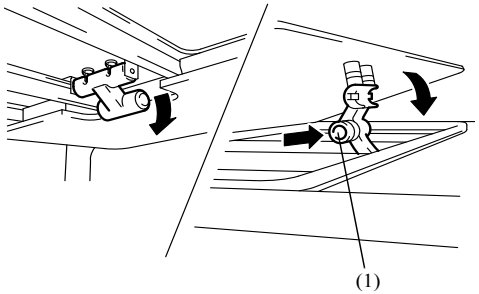

(1) Unlock button

Opening/Closing roof window
(Premium cabin models)

1. To open the roof window, pull the lever and push up until the roof window is locked.
2. To close the roof window, hold the unlock button and pull down the lever. When the roof window is closed completely, return the lever to the original position.

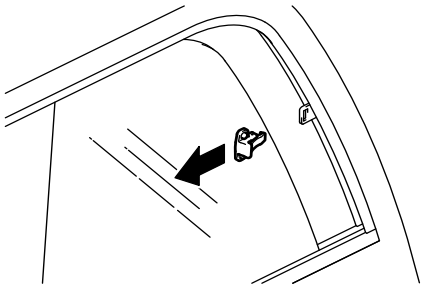

Opening/Closing side door window
(Steel/Premium cabin models)

The side windows can be opened in the right-left direction.

1. Grasping the knob at the center of the window will release the lock. Open the window to the left or right.
2. To close the side windows, use the knobs to slide the window to the right or left.

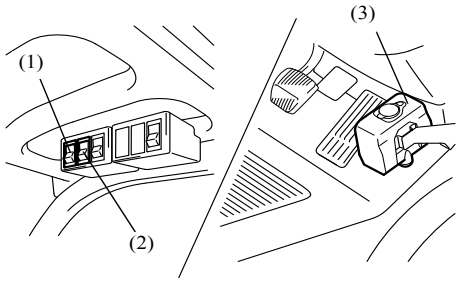

(1) Front wiper switch
(2) Rear wiper switch
(3) Reserve tank

Operating the wiper

The wiper will operate by turning the front or rear wiper switch to the right of the head guard to the ON position.
Press the washer button at the bottom of the front wiper switch to release wiper fluid.

Note:

To inspect or replenish washer fluid, use the reserve tank located to the right of the driver's seat.

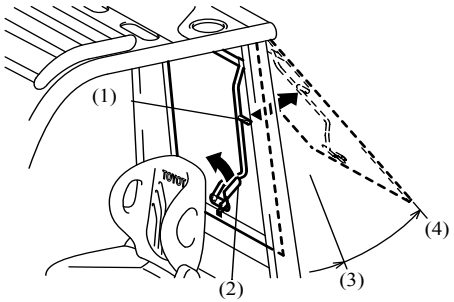

(1) Assist lever
(2) Lock lever
(3) Ventilation mode
(4) Maintenance mode

Opening/Closing rear window
(Half cabin models)

The rear window is a flip-up style window which can be set in two stages - to ventilation mode or maintenance mode.

1. Releasing the lock lever at the bottom of the window will open the window. Gripping the assist lever and pushing the window back will open the window to ventilation mode.
2. Pushing the assist lever further back to extend the damper, the window will be opened to maintenance mode.
3. To close the rear window, grip the assist lever and pull on the rear window until it closes completely, then operate the bottom lock lever to lock position.

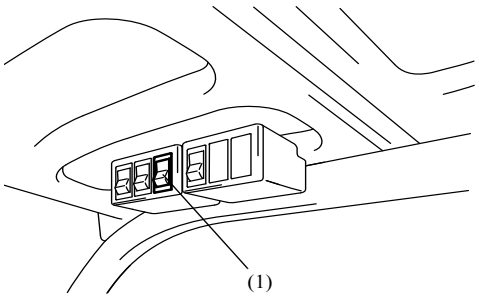

(1) Heater switch

Using the heater
(Steel/Premium cabin models)

The heater switch is located at the right-side of the head guard.
The heater switch can be set to Hi or Low which will operate the heater in two air volumes. The air outlet can be opened or closed and the entry of debris and dust into the heater unit can be prevented.

Note:
- Use the heater after sufficiently warming up the engine.
- Running the heater fan for extended periods of time while the engine is stopped or while idling the motor may cause the battery to run out.
- Using the heater for extended periods of time will cause the air inside the cabin to become stale and the glass to fog, so take care to open windows and ventilate the interior.

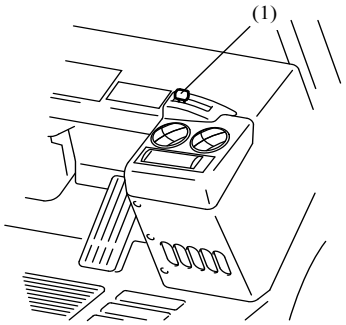

(1) Temperature adjustment lever

Temperature adjustment lever
(Steel/Premium cabin models)

This lever adjusts the temperature of the heater. Adjust the temperature to your preference.
Raise the temperature ..... Shift the lever to the left.
Lower the temperature ..... Shift the lever to the right.

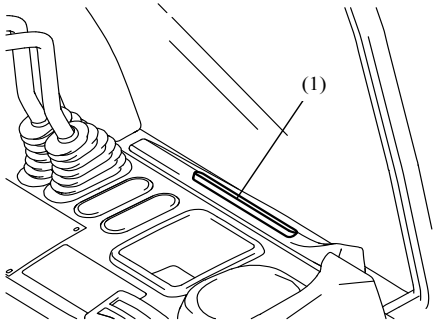

(1) Defroster

Using the defroster
(Steel/Premium cabin models)

The defroster is attached at the base of the front windshield.
Closing the air outlet of the heater will switch function to the defroster. Use the heater switches to operate and stop the defroster. It will allow you to quickly defog the front windshield.

HANDLING THE TOYOTA DPF-II SYSTEM (OPTION)

The Toyota DPF System is a device which traps the minute particles of black smoke in diesel engine exhaust gas with a DPF (diesel particulate filter) and carries out correct regeneration (combustion and elimination) by microcomputer control depending on the trapped amount.

⚠ **Caution**
- **Do not proceed to a long-hours' continuous operation before regenerating the DPF.**
- **When the yellow trapping indicator lamp on the display is on, carry out regeneration soon.**
- **Once the "Green/Yellow" lamp has begun to blink on the trapping indicator display, with the alarm buzzer sounding, carry out a regeneration treatment immediately.**
- **Do not turn off the power during regeneration expect in an emergency. (Turning off the power will cause the buzzer to sound. Turning off the buzzer for one minute or longer will cause the regeneration indicator lamp to blink.)**
- **If the display's alarm indicator lamp goes on and the alarm buzzer rings to an abnormality during regeneration, have the device inspected by your Toyota dealer.**
- **Do not allow water to get into the DPF System when your vehicle is being washed.**
- **The DPF System uses a high voltage (single phase AC200–240V), so be careful of electric shocks.**
- **The DPF System reaches high temperatures during operation so do not place objects that can easily catch fire, such as paper, etc., around it during regeneration.**
- **Use automobile light oil. If you use a crude fuel such as heavy oil, a pale smoke will be emitted and the running time and life span of the DPF System might be adversely affected.**
- **An engine that consumes a lot of engine oil will have an adverse affect on the DPF System, so have it serviced by your Toyota dealer.**
- **If white smoke (vapor, etc.) is emitted in some cases such as in acceleration just after starting the engine, there is nothing wrong with the engine system.**
- **Due to the operation of the AC power input detection function, if the AC power is not turned on during regeneration, regeneration will not start even when the regeneration switch is pressed. Again, when the AC power is turned on when starting the engine, the engine will not start and the operator will be notified via the blinking of the alarm indicator lamp and a buzzer sound.**
- **Due to the affects of gaseous and liquid substances, abnormal amounts of debris may be trapped in the DPF, and regeneration may not function. In this case, contact your Toyota dealer to request an inspection.**

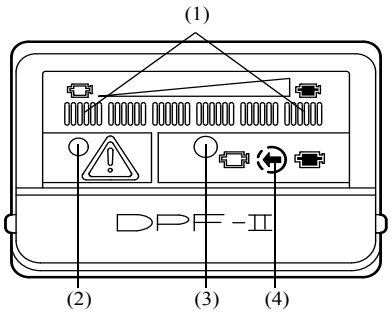

(1) Trapping indicator lamps
(2) Alarm indicator lamp
(3) Regeneration indicator lamp
(4) Regeneration switch

Display

Trapping indicator lamps
According to a level of the trapped black smoke, the "Green" lamps will incrementally come on one by one and then the "Yellow" will come on sequentially.

Alarm indicator lamp
This lamp comes on and the buzzer rings simultaneously to warn you when the amount of black smoke trapped exceeds the limit or when malfunction occurs in the DPF System.

⚠ **Caution**

When the alarm indicator lamp comes on, request an inspection from your Toyota dealer.

Regeneration indicator lamp
Indicate that DPF regeneration is underway.

Regeneration switch
Starts regeneration.

Explanation of display

1. Turn on the ignition switch.

(1) All the display lamps come on, so check if any are off, and the buzzer rings.

(2) 1 second later, the display shows the amount of black smoke trapped.

[Display]

DPF trapping stage Breakdown			Small	Large	Limit/Dangerous
Trapping indicator lamps	Green 1-5	On	On	Flashing	Flashing
	Yellow		On	Flashing	Flashing
Alarm indicator lamps					On
Alarm buzzer		–	–	Intermittent "beep, beep, ..."	Continuous "beep" (5 second)
Regeneration		Normal	Regeneration required	Regeneration required immediately	Replace DPF

2. Starting up the engine

⚠ **Caution**

Do not start up the engine with the external power connector plugged in. If so, the buzzer will sound and the alarm indicator will blink.

3. During operation
The amount of black smoke trapped is indicated by the trapping indicator lamp, the alarm indicator lamp and the buzzer, in that order.

4. If a malfunction occurs in the DPF System, the alarm indicator lamp comes on and the buzzer rings for 5 seconds.

⚠ **Caution**

When the alarm indicator lamp comes on, stop operation and request an inspection from your Toyota dealer.

5. Operation completion
Carry out DPF regeneration when a day's operation is over.

Toyota DPF-II System regeneration method

⚠ **Caution on regeneration**

- **Use a single phase AC200–240V external power source, rated 15A or more. Connect securely to a power source earth. The yellow/green cord of the AC cable for regeneration is the earth wire.**
- **Have any repairs to the external power supply plug done by an electrical specialist.**
- **Always fit an electromagnetic switch with earth leakage breaker that complies with the specifications described below to the external current plug electrical source.**
  - **Rated Current: 15A or 20A**
  - **Sensed Current: 30mA**
  - **Rated Voltage: Single phase AC 200–240V**
- **Do not allow water into the DPF air cleaner when washing the vehicle, etc.**
- **When the external power is cut off for one minute or longer due to power outage among others, the abnormality is detected, and the operator is notified by the blinking of the regeneration indicator lamp. At this time, after confirming that the external power has been normally restored, conduct regeneration again.**
- **Check that there are no objects that can easily catch fire around the DPF System before carrying out regeneration.**
  Select a location for regeneration which is well ventilated (with a draught), away from the rain and not near any waste paper etc. that can easily catch fire.
- **Do not handle the power plug with wet hands. A high voltage is used (single phase AC200–240V), so there is a danger of electric shock.**
- **Before starting DPF regeneration operation, make sure that a specified external power is supplied to the machine.**
  So long as the external power is not supplied, regeneration will fail to start, even if attempted.
- **During regeneration operation, combustion smoke is emitted out of the tail pipe.**

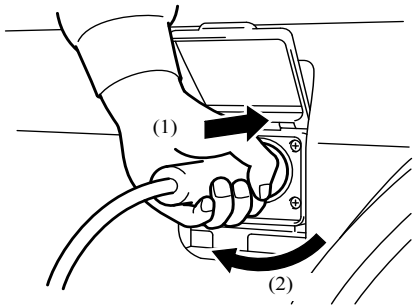

(1) Insert
(2) Lock

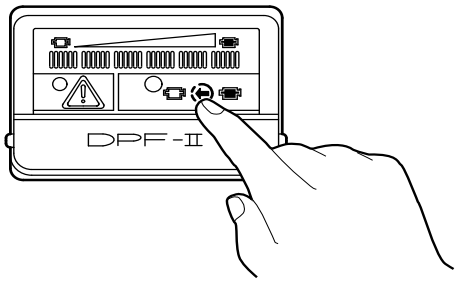

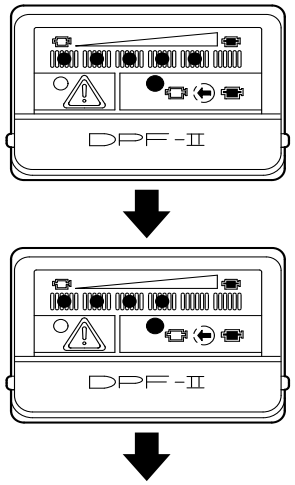

Regeneration operation procedure

1. Stop the vehicle, put the parking brake on and remove the ignition switch.
2. Insert the plug into an external power supply connection socket and turn it in the locking direction.
3. Press the regeneration switch on the display. The buzzer rings to start regeneration.

⚠ Caution

- **Remove your finger once the buzzer rings and the regeneration indicator lamp comes on. Pressing the switch for a long time stops regeneration operation procedure.**
- **With the ignition switch ON, the power will not come on even if you press the regeneration switch.**
- **If the external power is supplied, with the ignition switch ON, the buzzer will sound.**
- **Always use your fingertip to operate the switch panel on the display.**
- **If the regeneration indicator lamp should come on without the buzzer sounding, ask a Toyota dealer for an inspection.**

4. When regeneration starts, the regeneration indicator lamp and the trapping indicator lamps (all six) come on.

Note:
The microcomputer (ECU) automatically carries out regeneration, so the operator does not have to attend to the vehicle.

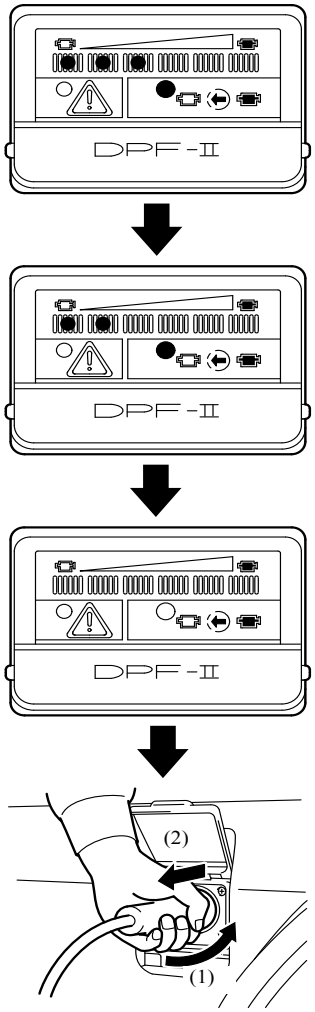

(1) Unlock
(2) Remove

5. The trapping indicator lamps go out in sequence from right to left (yellow → green) as regeneration proceeds. (every 10 minutes)
6. Once regeneration is over, all the indicator lamps go out and regeneration automatically stops.

Note:
The regeneration time is about 50 minutes when the green trapping indicator lamps (up to 5) light and about 70 minutes when the yellow trapping indicator lamp lights.

7. Be sure to remove the power plug.

⚠ Caution

Soot combustion interruption (Regeneration interruption)
When interruption soot combustion in progress is unavoidable, press the regeneration switch for about 5 seconds until the buzzer sounds. Then, the left green lamp and the regeneration indicator lamp will come on. After about 5 minutes, when all the indicator lamps are off, the engine can be activated again. Plug out the power cable after the regeneration indicator lamp is off. Do not interrupt soot combustion unless unavoidable as next soot combustion will be required earlier due to combustion remains.

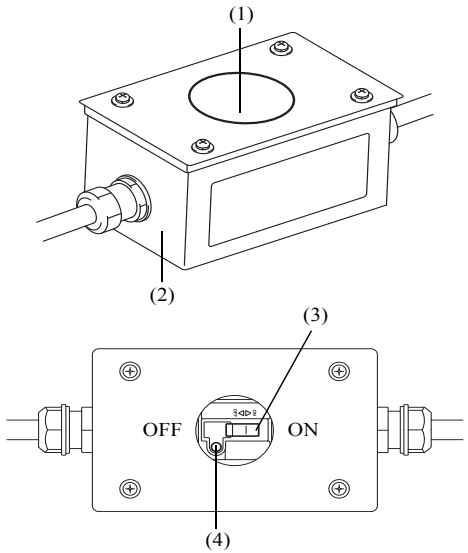

(1) Rubber cover
(2) Cable case
(3) Switch
(4) Test button

Handling the DPF AC cable with earth leakage breaker
(Option)

1. After plugging into an electrical source, remove the rubber cover from the cable case and turn on the earth leakage breaker (hereafter "the switch"). The breaker needs to be turned on at the beginning only. There is no need to turn the switch on or off for regeneration. Replace the rubber cover. Do not dismantle the case when replacing back the rubber cover.
2. Check the switch operation regularly (about once per month) by the method described below:

(1) Remove the rubber cover from the cable case.

(2) Start the regeneration process.

(3) After the regeneration process begins, swiftly press the grey switch test button (within 10 minutes).

(4) Check that the switch has turned off. At this time, the display's alarm indicator lamp will start blinking and the buzzer will continue to ring. After one minute elapses, the alarm indicator lamp will turn off, the regeneration indicator lamp will start blinking, and the regeneration process will stop. Then, when the buzzer stops, all indicator lamps will turn off. (This completes the check operation)

(5) Turn the switch on and replace the rubber cover.

(6) If you wish to continue with the regeneration process, press the regeneration switch to start the process.
If you wish to start the operation, disconnect the plug and start up the engine.

3. If the switch will not turn off, there is a possibility of switch malfunction. Request an inspection from your Toyota dealer.

Pre-operation check

Pre-operation checks and weekly inspections are the responsibility of the Toyota industrial vehicle user.
Be sure to perform a pre-operation check before beginning work to ensure safety.

Item	Inspection
Previously detected malfunctions	Correct.
Exterior	Vehicle body, oil leakage, water leakage, loose parts, exterior damage.
Wheels	Tire pressure, wear or damage, rims hub nuts.
Lamps	Lamp condition, damaged lamps.
Hydraulic oil	Oil level, contamination, consistency.
Radiator	Coolant level, antifreeze requirement.
Engine	Oil level, contamination, consistency, noise, exhaust.
Brake pedal	Pedal play, braking effect.
Brake fluid	Fluid level.
Parking brake	Operating force, braking effect.
Steering wheel	Looseness, play, vibration, veering.
Horn	Sound.
Instruments	Functioning.
Load handling system	Parts, oil leakage, cracking, looseness. Make certain that the SAS is functioning.
Fuel	Amount.
Operator restraint	Cut, frays and deck latch OK, seat belt & buckle

Walk around inspection

Vehicle uprightness

Does the vehicle lean to one side or the other? It so, check for a tire puncture or a problem with the undercarriage.

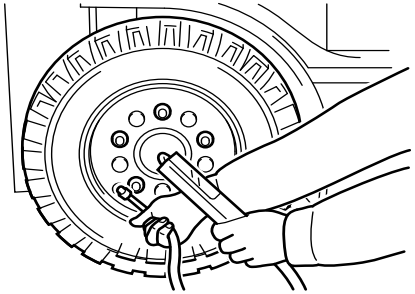

Beneath the vehicle

Check for any oil or water leakage on the ground or floor where the vehicle was parked.
Check for loose parts or damage.
If any unusual condition is found, have the vehicle inspected at a Toyota dealer.

Tire inspection

Tire inflation pressure

1. Use a tire pressure gauge and measure the inflation pressure. Adjust it to the proper level.

- See the service data section for the proper inflation pressure.
- Do not raise the pressure beyond the proper level.

2. After the adjustment, check if air is not leaking from the valve.

Damage, crack and wear of tires and rims

Check the tires for damage and wear, and the rims for bending. If the tires are damaged, or there is a marked difference in the wearing of tires between the front and rear or between the left and right is perceived, or bent rims are found, ask a Toyota dealer for inspection.

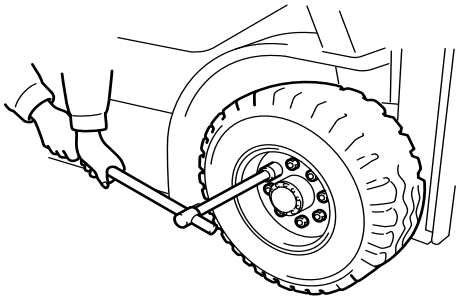

Hub nut inspection

Check the tightness of the hub nuts.
Avoid uneven torque and tighten all of the nuts uniformly. Refer to service data for proper torque.

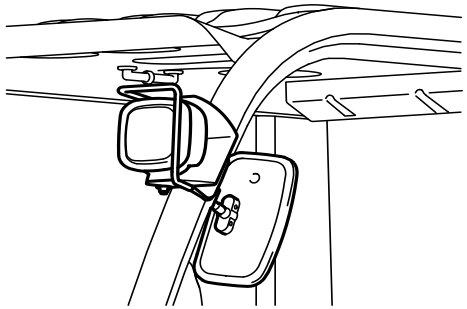

Lamp inspection

(Rear view mirror are optional)
Are the filaments intact? Is there any lens damage?
Always keep the lenses clean to insure proper forward vision.

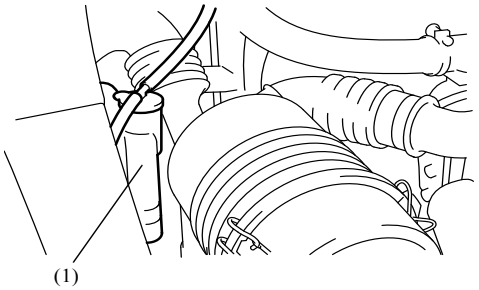

(1) Reservoir tank

Engine compartment inspection

Engine coolant level check and supply

Level check and supply of engine coolant shall be performed while the coolant is cool.

1. With the engine off, open the engine hood and check the engine coolant level in the reservoir tank.

Note:
The reservoir tank equipped to the radiator automatically supplies the engine coolant when the coolant quantity in the radiator becomes insufficient.

2. The coolant level is proper if it is between the upper and lower limits. If the level is below the lower limit, supply coolant to the upper limit.
3. The concentration of the Toyota Super Long Life Coolant (LLC) in the engine coolant must be 50%.

Note:
If no engine coolant remains in the reservoir tank, be sure to check the coolant level in the radiator, too.

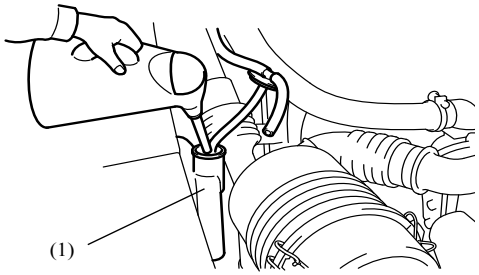

(1) Reservoir tank

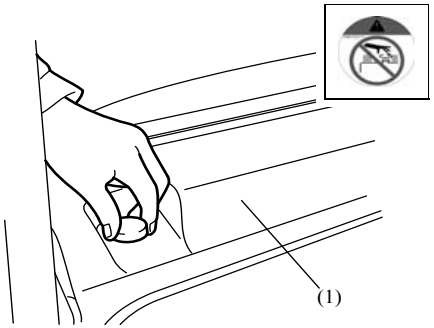

(1) Radiator cover

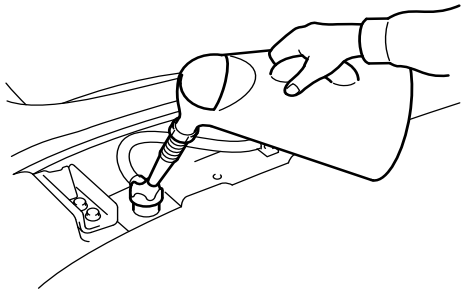

Checking the engine coolant level in radiator

1. Remove the radiator cover.
2. Remove the cap and check the coolant level from the filler port.
3. If the engine coolant is not visible through the filler port, fill appropriately diluted coolant (LLC) to the port.

Note:
To close and tighten the radiator cap, match the pawl on the reverse side of the cap with the notch on the filler port and turn the cap fully clockwise while applying a downward force.

⚠ **Warning**
When the engine is hot, it is very dangerous to remove the cap. Coolant level check must always be performed when the engine is cold.

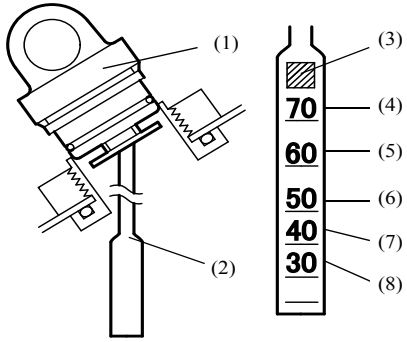

(1) Oil cap
(2) Level gauge
(3) Gauge identifier
(4) Lift high 6,100–7,000mm
(5) Lift high 5,500–6,000mm
(6) Lift high 4,500–5,000mm
(7) Lift high 3,300–4,000mm
(8) Lift high 3,000mm or less

3. Extract the level gauge gently and check if the oil adhesion is up to the level line.
4. If the oil level is insufficient, add oil. Spilled and splashed oil must be wiped off thoroughly. Adjust the oil level so that it will fall within a range of 0 thru +10mm from the lift-high mark on the gauge as illustrated on the left side.

Gauge Identifier	Applicable Models
10, 18, K2, K3	02-8FGF15, 18 02-8FDF15, 18 02-8FGKF20 02-8FDKF20 32-8FGF15,18 62-8FDF15,18
20, 25	02-8FGF20, 25 02-8FDF20, 25 52-8FDF20, 25 32-8FGF20, 25 62-8DFD20, 25
28, 30, 35	02-8FGF30 02-8FDF30 52-8FDF30 02-8FGJF35 02-8FDJF35 52-8FDJF35 32-8FGF30 62-8FDF30 32-8FGJF35

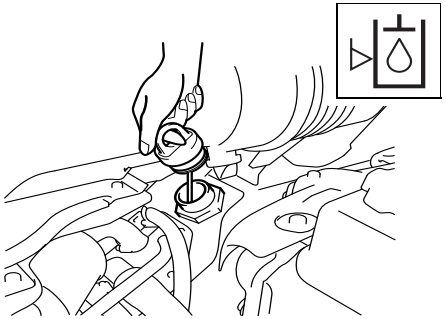

Checking hydraulic oil level

Always stop the engine and lower the forks to the ground before checking the level of the hydraulic oil, while the vehicle is on level ground.

1. Open the engine hood and remove the oil cap.
2. Wipe the level gauge attached to the oil cap with clean cloth, and insert it again into the tank.

Note:
Inspect the oil level by placing the level gauge on the opening of the oil supply inlet, without pushing the oil cap in.

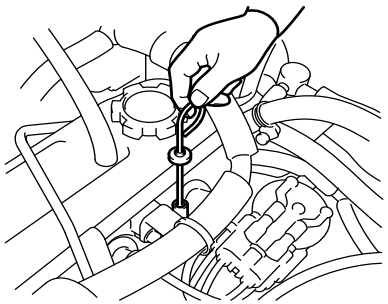

Engine oil inspection

1. Park the vehicle on a flat ground. If the vehicle is inclined, the indicated level may be incorrect.
2. The oil level must be checked before starting the engine or at least 3 minutes after the engine is stopped.
3. Extract the oil level gauge and wipe it with clean cloth. Insert it again and check if the oil level is between the F and L levels.
4. If the oil level is below the L line, add oil to the F line.

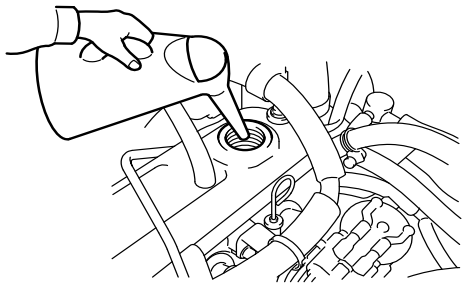

Adding engine oil

1. To supply oil, remove the filler cap and pour oil through the filler port. Never let the oil level exceed the F line.
2. The oil to be supplied must be appropriate for the season.

SAE40 Ambient temperature
higher than 30°C (86°F)
SAE30 Ambient temperature
0°C to 30°C (32°F–86°F)
SAE20 Ambient temperature
-10°C to 0°C (14°F–32°F)

⚠ **Caution**

Always use the same brand of oil if possible.

Leakage inspection

Check the engine compartment for any oil or fuel leakage.
Clean the radiator if it is clogged and check if there are any foreign objects, such as paper or other, onto the radiator grill.

On board vehicle inspection

Brake fluid inspection

With the engine off, check the level of the brake fluid in the reservoir tank. The level should be within the range shown in the figure.
If the level is below the lower limit, add brake fluid up to the proper level. If the decrease in brake fluid is excessive, the brake system may be leaky. Ask a Toyota dealer for inspection as early as possible.

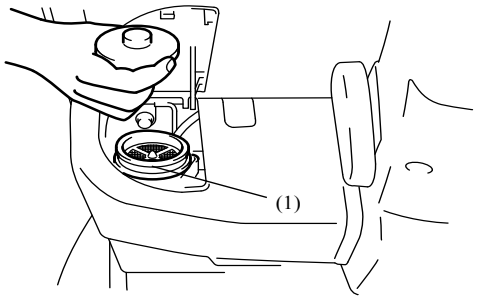

(1) Reservoir tank

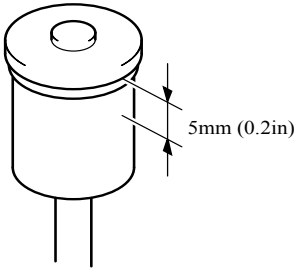

⚠ **Warning**

- **Never use any oil other than brake fluid.**
- **Do not allow dirt to get into the reservoir tank. Even a small amount of dirt in the brake fluid can prevent proper braking.**
- **Check the small vent hole in the reservoir tank cap frequently to make sure that it is not clogged with dirt.**

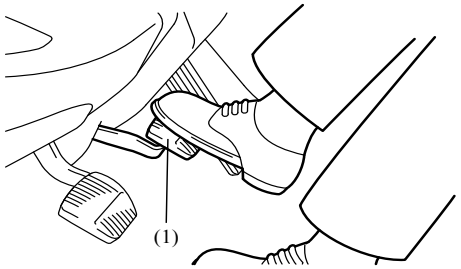

Brake pedal inspection

1. Depress the brake pedal fully, and check the floor clearance (clearance between the pedal and floor).

Note:
See the service data section for the floor clearance.

2. Make sure that the pedal dose not go any further when it is kept depressed.
3. Also check that no abnormality is observed with pedal depression and return.
4. Manually depress the brake pedal to check the play until a resistance is felt.

Note:
See the service data section for the value of brake pedal play.

⚠ **Warning**

Ask a Toyota dealer for inspection if the play is excessive, pedal movement is abnormal or brake performance is improper.

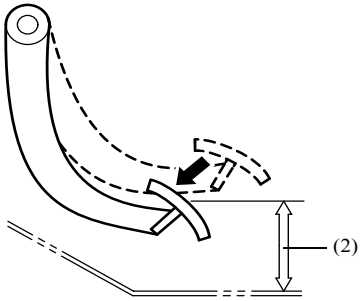

(1) Brake pedal
(2) Brake pedal floor clearance

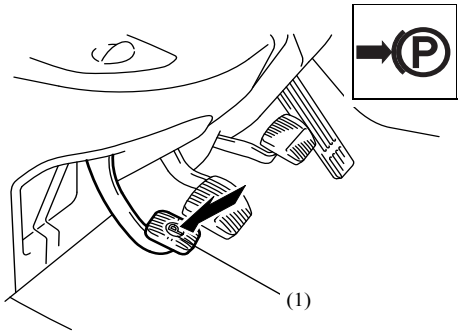

(1) Parking brake pedal

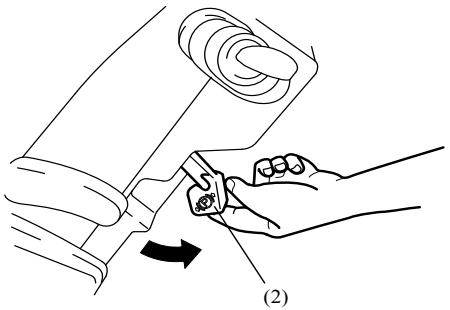

(2) Parking brake release lever

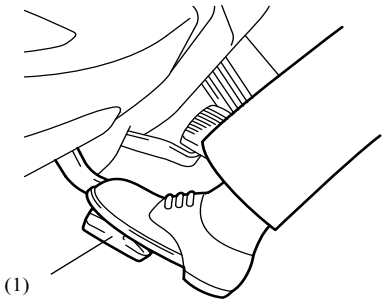

(1) Inching and brake pedal

Parking brake inspection

1. Fully press down on the parking brake pedal and insure that the brake is functioning normally.

2. After fully pressing the parking brake pedal, pull the parking brake release lever toward you and confirm that the parking brake is released.

⚠ **Warning**

Ask a Toyota dealer for inspection when any abnormality is found.

Inching and brake pedal inspection

1. Manually depress the inching and brake pedal to check the play until a resistance is felt.

Note:

See the service data section for the value of inching and brake pedal play.

2. Depress the inching and brake pedal and check that there is no destruction or abnormal resistance.

⚠ **Caution**

Ask a Toyota dealer for inspection when any abnormality is found.

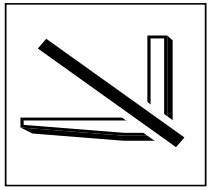

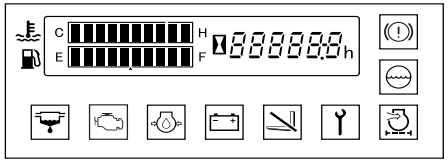

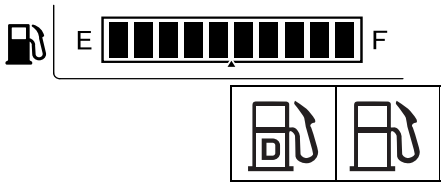

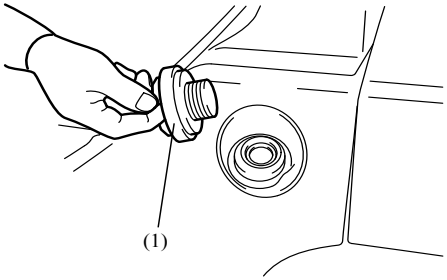

(1) Fuel tank cap

Inspection of OPS lamp

Sit on the seat, start the engine, and check that the OPS lamp is not lighted.
In the following circumstances, a malfunction to the OPS system may have occurred. Park the vehicle at a safe location and contact your Toyota dealer.

- The OPS lamp does not light up when the operator leaves the seat.
- The OPS lamp does not turn off when the operator return to the seat.

Instrument inspection

Start the engine and see that they operate properly.

Fuel level check and supply

1. Observe the fuel meter to see if the fuel is sufficient.

Note:

After the end of daily operation, fill the tank with fuel to prevent the moisture in the air in the tank from mixing into the fuel.

2. When supplying fuel, stop the engine, remove the fuel tank cap by turning it counterclockwise, and pour fuel through the fuel filler neck.
3. After fueling, be sure to tighten the fuel tank cap.

⚠ **Caution**

- **Always stop the engine and keep any fire source away before and during the fueling operation.**
- **Carefully prevent entrance of water and dirt into the tank during fueling.**

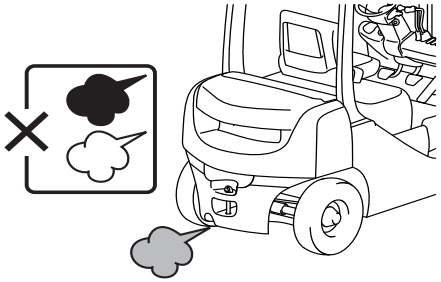

Engine inspection

Start the engine and warm it up sufficiently.

1. Check each meter and warning lamp to see there is no abnormality.
2. Check if the engine is generating abnormal sound or vibration.
3. Check the exhaust gas color to see it is normal.
   Colorless or light blue exhaust indicates complete combustion; black exhaust, incomplete combustion; and white exhaust, burning oil as a result of oil getting into the cylinders.

⚠ **Warning**

- **The exhaust gas can cause serious injury if inhaled. If you must start the engine inside building or enclosure, insure sufficient ventilation.**
- **The gasoline engine carburetor is equipped with the automatic choke that keeps the engine running at a relatively high speed a while.**
  Do not be bothered, however, becomes the engine resumes a normal speed upon warming enough.

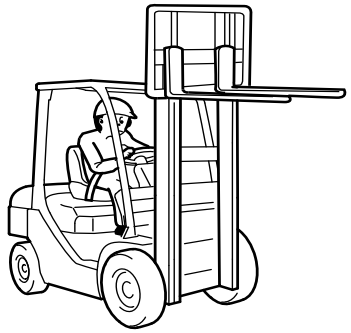

Load handling system

1. Check the forks installation state, for cracks and bending.
2. Check for mast distortion, chain tension and oil leakage from cylinders and piping.
3. Operate the lift and tilt levers to check their operating state.
   If anything unusual is found, have the vehicle inspected at a Toyota dealer.

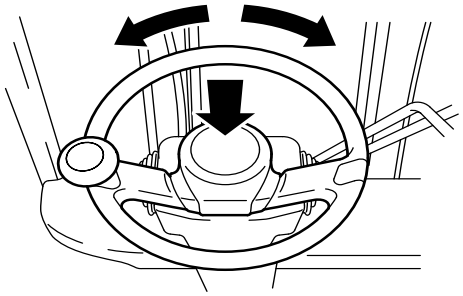

Steering wheel inspection

Note:
Perform the inspection after starting the engine.

1. Check the steering wheel play with the rear wheel set in the straight traveling direction.

Note:
See the service data section for the standard play of steering wheel.

2. Turn the steering wheel in the circumferential direction and also move it up and down to check there is no looseness.
3. Push the horn button to check if the horn sounds normally.
4. If any abnormality is found, ask a Toyota dealer for inspection.

While moving slowly

Clutch disengagement and slipping

Press the inching pedal and check clutch engagement while moving.

⚠ **Caution**

Insure that the gear shift lever or control lever operates properly in each gear and then make above checks while moving slowly.

Brake effectiveness

Inspect to see if there is anything unusual when the brake pedal is pressed or if the brakes only work on the side.
Effect the parking brake and insure that the vehicle can be stopped and that a parked condition can be maintained.

⚠ **Caution**

If anything feels even slightly unusual, stop vehicle operation immediately and have the vehicle inspected at a Toyota dealer.

Steering inspection

While moving the vehicle slowly in a safe location, turn the steering wheel to the left and right and check for any unusual movement.

Inspecting SAS system

Check the SAS system to make certain that it is functioning properly.
Check the mast to make certain that it can be properly tilted either forward or backward and moved up. Besides, make certain that the mast can automatically stop at its horizontal position.

⚠ **Caution**

If you feel that something is abnormal even slightly, or when the diagnosis lamp lights up or blinks, or if an error code appears on the hour meter display, immediately stop operating the vehicle and contact your Toyota dealer to request an inspection. (In the case of diesel engine vehicles, the diagnosis lamp may light up during engine warm-up after a cold-start, but this does not indicate a malfunction.)

BEFORE GARAGING THE VEHICLE

Remove dirt from all vehicle components and then perform the following.

1. Inspect for oil or water leakage.
2. Inspect each component for warping, scratches, dents or cracks.
3. Clean the air filter element and lubricate parts as required.
4. Raise the forks all the way up and down to lubricate the inside of the lift cylinder.

⚠ **Caution**

Even a small malfunction can cause a serious accident.
Do not operate the vehicle until repairs have been completed.
If you sensed anything unusual during operation, notify the supervisor.

WEEKLY MAINTENANCE

Inspect the items below in addition to the pre-operation items. Have necessary adjustments or replacements performed at a Toyota dealer. Please inspect the vehicles thoroughly to insure safety and pleasant working conditions.

Weekly (40-hour) inspection items
Air cleaner - clean
Fan belt - inspect
Torque converter oil level - check
Battery electrolyte level -check
Bolts and nuts - retighten
Mast and steering linkage - grease
Chain Lubrication - engine oil

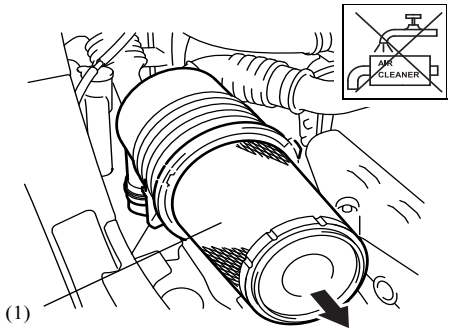

(1) Element

Air cleaner cleaning

The element can be taken out after removing the three catches fixing the element.

Element cleaning

1. Tap the element filter paper lightly without causing any damage or blow dust off with compressed air (7 kg/cm² or less) from inside.
2. After element cleaning, remove any dust in the evacuator valve.

Note:

- Always replace the element if the filter paper is torn or damaged.
- Wash the element if heavily contaminated.

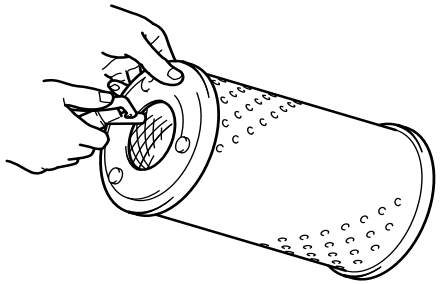

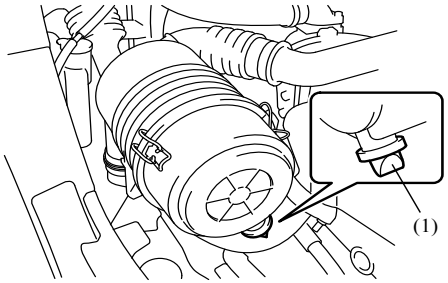

(1) Evacuator valve

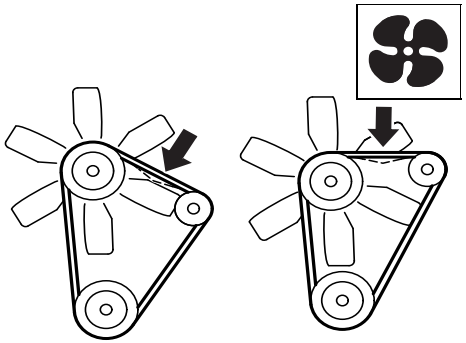

4Y Engine 1DZ-III, IDZ-II, 3Z Engine

How to wash the element

1. Soak the element in water containing neutral detergent for approximately 30 minutes and then wash. Use care not to scratch the filter paper.
2. After washing, rinse the element with clean water (water pressure less than 2.8 kg/cm²).
3. Allow to dry naturally or use a dryer (cold air). Never use compressed air or flame.

Note:

- The element should be replaced after washing six times or after it is used for one year.
- It is unnecessary to clean the inside element when cleaning the double cyclone air cleaner.(Option)
  Only clean the outside element.
  It is essential to replace both outside and inside elements, in time of replacement.

Fan belt inspection

Inspect the fan belt for cracks, fraying and tension.
If any abnormalities are found, have the belt replaced or adjusted at a Toyota dealer.
Refer to service data for tension.

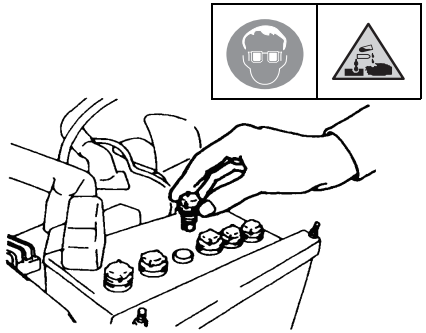

Battery electrolyte check

1. The battery electrolyte should be between the upper and lower levels (10 to 15 mm from the top of the plates).
2. If the electrolyte level is below the lower level, remove the cap and add distilled water to the upper level through the water inlet port.

⚠ **Caution**

Be sure to use distilled water for battery electrolyte. Also, wear protective glasses when working on the battery.

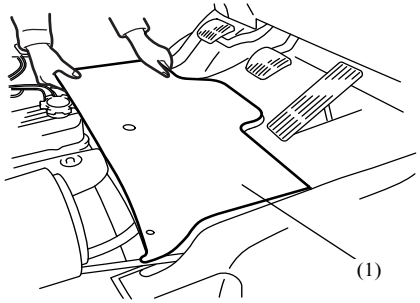

(1) Toe board

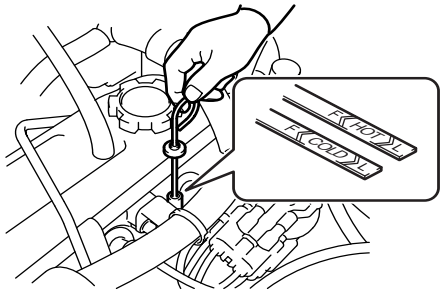

Torque converter oil inspection

1. Park the vehicle at a safe and level ground, and stop the engine.

⚠ **Caution**

Inspect with the parking brake pedal engaged and the forks are lowered to the ground.

2. Open the engine hood and remove the toe board.
3. Extract the level gauge and wipe it with clean cloth.
4. Insert the level gauge back to the hole from which it is removed, and extract it again to check if the oil level is between the F and L lines on the level gauge.

Note:

- Perform inspections using the COLD side of the level gauge before operating the vehicle.
- The level gauge contains the inscriptions “COLD” and “HOT” on either side. Conduct inspections using the “COLD” side before operating the vehicle and when the oil temperature is 40° or under. If you have operated the vehicle and the oil temperature is 60° or over, use the “HOT” side to conduct inspections after 30 seconds and within five minutes after the engine is stopped.

5. If the level is near or below the L line, add oil to the F line.

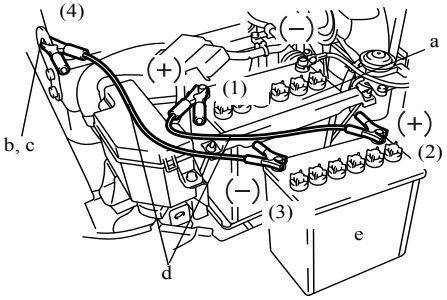

a. Dead-battery vehicle
b. Engine hanger
c. To frame
d. Booster cable
e. Rescue battery

Retightening of bolts and nuts

Retighten each bolts and nuts on the chassis and load handling system.

Greasing mast and steering linkage

Grease in accordance with the lubrication table.

⚠ **Caution**

- **Clean the grease fitting tips thoroughly prior to greasing.**
- **After greasing, wipe off excess grease.**

When the battery is dead

When a booster cable is available, it is possible to start the engine using the battery of another vehicle.
Connect the booster cable following the sequence of the illustration.
Make sure of (+) and (-) terminals of the cable when connecting.

⚠ **Caution**

- **Connection (1): The (+) terminal of dead battery.**
- **Connection (4): Use a frame apart from the battery.**
- **Do not directly connect batteries to avoid a danger of explosion. (An inflammable gas generated from batteries may catch fire.)**

SELF SERVICING

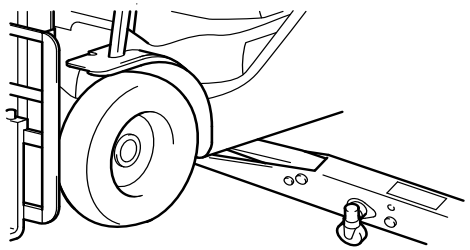

Changing tires

⚠ **Caution**

- **Use proper safety precautions when jacking the vehicle.**
  Never get under the forks or frame.
- **In the case of a wheel with a divided rim, do not loosen the rim bolts and nuts when loosening the hub nuts. When loosening the rim nuts or removing the rim bolts, be sure to completely remove the air before loosening.**
- **Refer to service data for hub nut tightening torque and tire air pressure.**
- **Tire air pressure is very high, so pay attention to rim deformation, cracks, etc. Never exceed proper air pressure.**
- **Do not replace any tire without turning on the ignition switch before jacking up the vehicle. Upon completion of the tire replacement, return the ignition switch to the OFF position.**

Front wheels

1. Unload the vehicle and place it on level ground.
2. Set the parking brake and chock the wheels. Locate the jack-up point on the bottom surface of the frame in the rear of a front tire. Securely insert the jack there. Confirm that the jack is properly positioned.
3. Jack up to just prior to the wheels coming up off the ground and loosen the hub nuts.
4. Jack up until the wheels come off the ground. Completely remove the air pressure from the tire then remove the hub nuts and remove the wheel.
5. To reinstall the wheel after changing a tire, perform the steps for removing in reverse order. The hub nuts should be tightened evenly and in the sequence shown in the figure.
6. After replacing the wheel, check and adjust the tire air pressure.

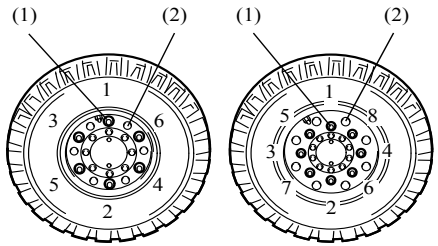

(1) Hub nuts
(2) Rim nuts
(Never loosen without removing the air)

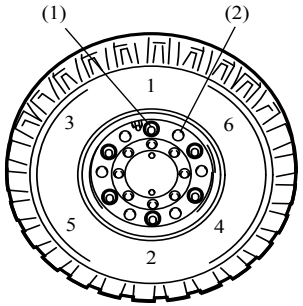

(1) Hub nuts
(2) Rim nuts
(Never loosen without removing the air)

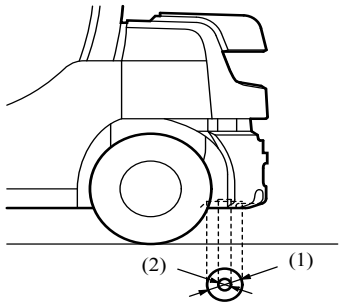

(1) Garage jack
(unavailable in 1-ton models)
(2) Pulsometric type jack

Rear wheels

1. Place the vehicle on level ground.
2. Set the parking brake and chock the wheels then insert the jack under the weight.

⚠ **Caution**

Never loosen the divided rim nuts. Should any of the nuts be found loose or otherwise abnormal, deflate the tires and then loosen the hub nuts to remove the tires.

Jack setting position

Apply the jack to the jack point under the counter-weight.

⚠ **Caution**

Be sure to use a jack whose capacity is 5.0 ton or more.

3. Jack up to just prior to the wheels coming up off the ground and loosen the hub nuts.
4. Jack up until the wheels come off the ground. Completely remove the air pressure from the tire then remove the hub nuts and remove the wheel.
5. To reinstall the wheel after changing a tire, perform the steps for removing in reverse order.
   The hub nuts should be tightened evenly and in the same sequence as for the front wheels.
6. After replacing the wheel, check and adjust the tire air pressure.

Adding antifreeze

If the vehicle is left in an area where the temperature is less than 0°C, the coolant will freeze and may damage the radiator and/or cylinder block. In such cases, antifreeze coolant must be used.
When Toyota Super Long Life Coolant (LLC) is used, it must be changed once every two years.
Freezing temperature varies depending on the amount of antifreeze added.

Antifreeze mixture (%)

Freeze protection temperature (°C)	-12	-15	-24	-35
Mixture (%)	25	30	40	50

⚠ **Caution**

The antifreeze fluid is flammable, so be particularly careful to avoid flame.
Prior to adding antifreeze, inspect the radiator, water pump, piping and cylinder block for leaks.
The procedures for adding antifreeze are as follows.

1. Remove the radiator cap. Loosen the drain cock on the radiator and cylinder block and drain the coolant.
2. Flush out the radiator and cylinder block by adding clean water through the radiator inlet.
3. After the water has drained out of the radiator and cylinder block, tighten the radiator and engine drain cocks.
4. Add the proper amount of antifreeze to the radiator inlet and fill up the remaining space with clean water.
5. When warm weather arrives and there is no longer any danger of freezing, drain the coolant containing the antifreeze (except LLC, LLC is every 2 years in replacement).
   Flush out the radiator and engine block and fill with clean water.

Cleaning of Pre-cleaner (Option)

Inspect the pre-cleaner and clean it if dust has accumulated up to the white line.

Fuse replacement

If a lamp does not come on or an electrical device does not function, the corresponding fuse may be blown.
Check the fuse for each device. The fuse box is located in the front left as seen from the opened engine hood.

Note:
See the table below for the device corresponding to each fuse.

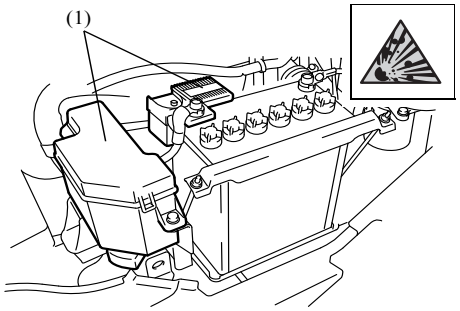

(1) Fuse box

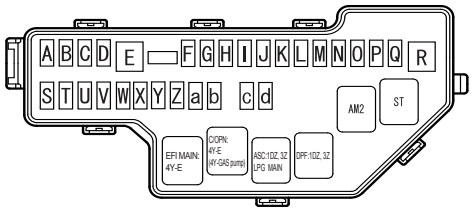

Fuse assignment

A	25A	BLR	P	15A	WORK_LP
B	30A	STA	Q	15A	HEAD
C	20A	RR-WIP	R	40A	AM2
D	20A	FR-WIP	S	30A	SPARE
E	40A	AM1	T	7.5A	SPARE
F	15A	HORN	U	7.5A	HME
G	–	–	V	7.5A	ST
H	15A	EFI:4Y-E DPF:1DZ, 3Z	W	10A	GAUGE
			X	10A	BACK_LP
I	7.5A	ALT-S	Y	7.5A	SFT
J	7.5A	STOP	Z	7.5A	TURN
K	7.5A	ACC-B (for RADIO)	a	15A	IGN:4Y-E
L	7.5A	TAIL		7.5A	IGN:1DZ, 3Z, 4Y-M
M	7.5A	ECU-B	b	15A	SPARE
N	15A	E-THRO:4Y-E ECU-B2:1DZ, 3Z, 4Y-M	c	10A	SPARE
			d	10A	ECU-IG
O	15A	HTR			

Including optional accessories

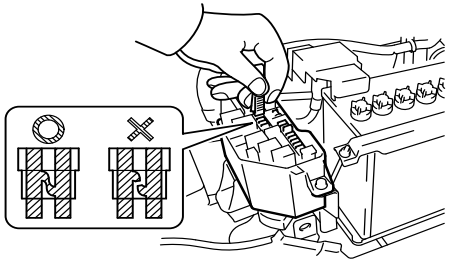

The fuse check and replacement procedures are as follows:

1. Set the ignition switch to the OFF position.
2. Remove the fuse box cover and take off the clip attached to the fuse box.
3. Apply the fuse clip to a fuse to remove the fuse.
4. The fuse is blown if its state is as shown at right in the left illustration. Replace it with a spare fuse.

⚠ **Caution**

- **Use the fuse having the same capacity as that of the installed one.**
- **If the replaced fuse is blown again, ask a Toyota dealer for inspection.**
- **Ask a Toyota dealer to replace the GLOW or ALT fuse, if necessary.**

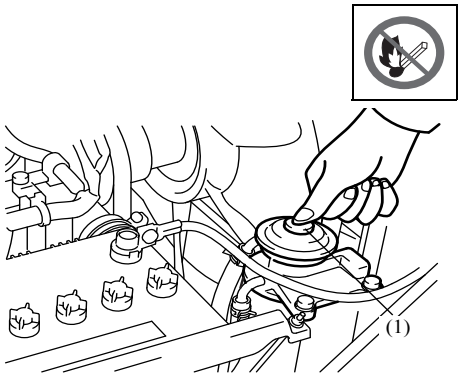

Air purge of the fuel system
(Diesel engine models)

When fuel has been completely depleted or when maintenance has been performed on the fuel system, be sure to perform air purge in the following sequence.

1. Open the engine hood.
2. Operate the priming pump up and down to perform air bleeding.

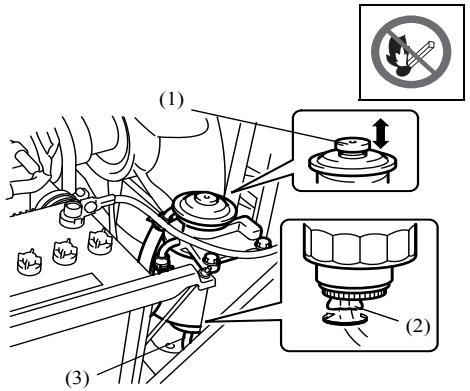

(1) Priming pump
(2) Drain plug
(3) Drain hose

Draining the sedimenter
(Diesel engine models)

The sedimenter separates the water contained in the fuel. It is integrated with the fuel filter.
If the sedimenter warning lamp comes on, immediately drain water according to the following procedure because the accumulated water in the sedimenter is above the specified level:

1. Place a water receiving container under the open end of the drain hose under the fuel filter.
2. Turn around the drain cock a time or two to loose it and operate the priming pump up and down to drain the water in the sedimenter.
3. When light oil starts to flow out after the end of water draining, firmly tighten the drain cock.

⚠ **Caution**

Wipe the light oil cleanly from the adjacent area.

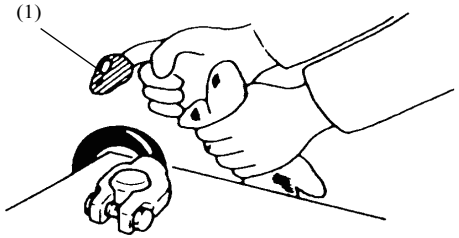

(1) Grease

Maintaining the battery

Terminals

1. A loose or corroding terminal causes failure in connection: Eliminate white powder, if noticed on the terminal, by pouring warm water over it to disable and then grease the terminal.
2. Remove the terminal, if it is extremely corroded, from the battery to brush off the corrosion using a wire brush or sandpaper. Then connect the terminal tightly to the battery and grease the terminal.

Note:

When removing the battery, disconnect the negative (-) terminal first.
When reconnecting it, connect the positive (+) terminal first.

⚠ **Caution**

- **Stop the engine when attempt to work on the battery and terminals.**
- **Be careful not permitting any foreign matter to come into the battery by means of putting the lids tightly in place.**
- **Be careful not causing a short circuit on the battery nor nearing fire, such as smoking fire, because the battery-emitted gas is inflammable.**
- **Be cautious enough not to contact the battery electrolyte.**
  When it comes into contact with an eye or skin, wash it off immediately with plenty of water and then see a doctor.
- **Charge the battery with the lids off in a well-ventilated area.**
- **When battery electrolyte is spilt, be certain to wash it off with water thoroughly the spot and adjoining area.**

Cleaning the radiator fin

Clean the radiator and radiator fin. If debris is trapped therein, this may cause over-heating.

⚠ **Caution**

- **After stopping the engine, confirm that the engine has sufficiently cooled down before conducting cleaning. Taking adequate precautions may result in burns.**
- **When cleaning the radiator fin, take care not to cause it to become deformed.**
- **When performing cleaning, always wear safety goggles and dust mask.**

FUEL TANK CHECK

Check fuel tank, tank covering, fuel inlet, and drain plug against possible fuel leak. Follow the steps below.

1. Try to smell leak.
2. Look for leak.
3. Touch possible leak.

See the nearest Toyota dealer upon finding leak and have them repair tank immediately.

⚠ **Caution**

Never perform do-it-yourself welding or other repair work for it might cause explosion or fire.

FRAME SERIAL NUMBER

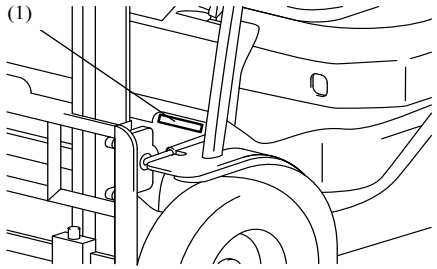

(1) Frame serial number location

Frame serial number location

The frame serial number is stamped on the front cross plate. Please refer to the frame serial number when making inquiries about your vehicle.

HOW TO READ THE NAME PLATE

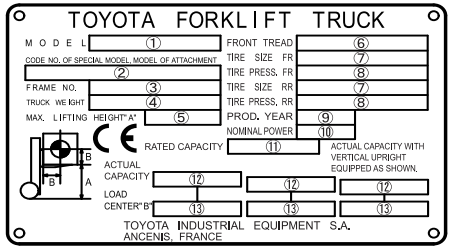

The load capacity is engraved on the name plate.
Make sure of the load center and capacity before starting the operation.

1. Vehicle type
2. Special vehicle type, Attachment type
3. Frame No.
4. Vehicle weight
5. Mast lifting height
6. Front tread
7. Tire size
8. Air pressure
9. The year of manufacture
10. Rated hour power
11. Rated capacity
12. Load capacity
13. Load center

LUBRICATION CHART

1. Chain
2. Differential gear
3. Front wheel bearing
4. Brake master cylinder
5. Torque converter case
6. Rear wheel bearing
7. Steering knuckle king pin
8. Oil tank
9. Engine crank case
10. Rear axle beam front pin
11. Rear axle beam rear pin
12. Tilt steering locking mechanism
13. Mast support bushing
14. Tilt cylinder front pin
15. Propeller shaft
16. Swing lock cylinder
17. Tie rod end pin
18. Rear axle cylinder end pin
19. Side shifter (Option)

i) Inspect every 8 hours (daily)
ii) Inspect every 40 hours (weekly)
iii) Inspect every 250 hours (6 weeks)
iv) Inspect every 1000 hours (6 monthly)
v) Inspect every 2000 hours (annually)
○:Inspect and service
●:Replase
A)MP grease
B)Engine oil
C)Hypoid gear oil
D)Hydraulic oil
E)ATF GM Dexron II
F)Brake fluid
G)Molybdenum disulfide grease

Note:
In case of the hard operating condition, service interval of 170 hours or 1 month may be recommended.

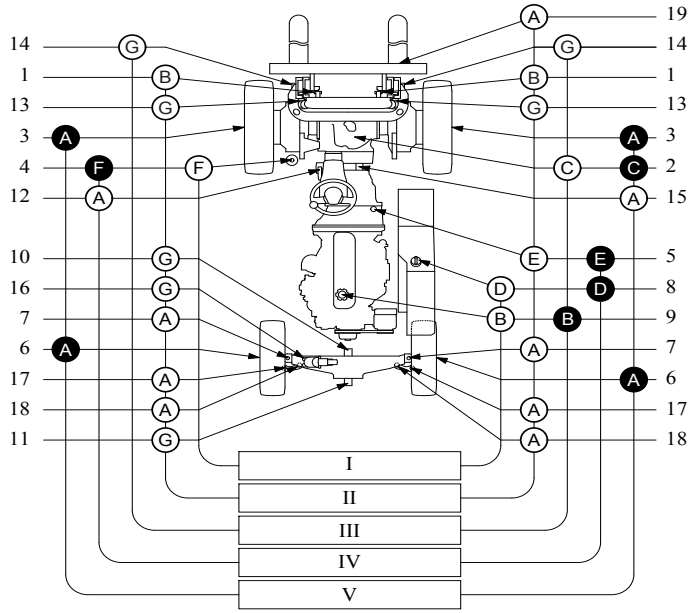

PERIODIC MAINTENANCE

Periodic inspection and maintenance are necessary to keep your Toyota industrial vehicle running smoothly. The designated number of hours in the inspection cycle are as follows.

Daily (pre-operation check) ....Every 8 hours
Weekly .....Every 40 hours
6 weeks .....Every 250 hours
3-month .....Every 500 hours
6-month .....Every 1,000 hours
Annually.....Every 2,000 hours

If operation time exceeds 250 hours within 6 weeks use the number of hours as the guide for performing periodic inspection. Pre-operation checks and weekly inspections should preferably be performed by the user. 6 week, 3-month, 6-month and annual inspection should be performed by a Toyota dealer since high-level technology and special tools are required.
Refer to the periodic maintenance table to determine inspection and maintenance items and inspection cycles.
Use only genuine Toyota parts for replacement parts, and use the recommended types of lubricants.

PERIODIC REPLACEMENT TABLE

REPLACEMENT PERIOD (Accumulated hours of operation or monthly periods of operation, whichever comes sooner.)	EVERY	6 WEEKS	3	6	12	MONTHS
	EVERY	250	500	1000	2000	HOURS
Engine oil		●*1	●	←	←	
Engine oil filter		●*1	●	←	←	
Coolant (except LLC, LLC is every 2 years)			●	←	←	
Air cleaner element					●	
Fuel filter				●	←	
Torque converter oil				●	←	
Torque converter oil filter				●	←	
Differential gear oil					●	
Hydraulic oil				●	←	
Hydraulic oil filter		●*1		●	←	
Wheel bearing grease					●	
Spark plugs				●	←	
Master cylinder, wheel cylinder cap and seals					●	
Brake fluid				●	←	
DPF inline filter (Option)				●	←	
Power steering hose			(Every 2 years)			
Power steering rubber parts			(Every 2 years)			
Hydraulic hose			(Every 2 years)			
Reserve tank hose			(Every 2 years)			
Fuel hose			(Every 2 years)			
Torque converter rubber hose			(Every 2 years)			
Forks damper (Option)			(Every 2 years)			
Chain			(Every 3 years)			
DPF muffler filter (Option)			(Every 3 years)			
DPF air cleaner (Option)			(Every 2 years)			
Hydraulic oil pump seal			(Every 3 years or 6,000 hours)			
Swing lock cylinder			(Every 10,000 hours)			
Catalytic muffler (Option)					●	
3-way catalytic muffler (Option)			(Every 5 years)			

Note:

- In case of the hard operating condition, the service interval of 170 hours or 1 month may be recommendable.
- *1:Change the engine oil and oil filter of new vehicles at 6 weeks or 250 hours.
- Applicable engine models: 4Y, 1DZ-III, 3Z
- Engine oil is limited to those vehicles using engine oil with following or higher grades:
  Gasoline engines: API class SL or better
  Diesel engines: API class CF-4 or better

PROTECT YOUR INVERSTMENT WITH TOYOTA GENUINE PARTS

Why gamble with your valuable assets? When your forklift needs periodic maintenance - as every forklift does - you need Toyota Genuine Parts.
The same parts used on Toyota assembly lines - meeting the same tough Toyota standards for "PERFORMANCE", "DURABILITY", and "SAFETY".

TOYOTA GENUINE PARTS

Offer Excellent Dust-catching Performance on:
e.g.Air Element, Torque converter Oil Filter
Return Oil Filter, Engine Oil Filter
Fuel Filter

IF YOU USE A NON-GENUINE ENGINE OIL FILTER:
1. Clogging may result, which can lead to engine seizure.
2. The engine oil may become dirty faster, necessitating frequent oil changes.
3. It can pass dirty oil to the engine, causing engine wear.

TOYOTA GENUINE PARTS

Offer Supreme Durability on:
e.g.Clutch Disc
Radiator Hose
V Belt

IF YOU USE A NON-GENUINE RADIATOR HOSE:
1. The hose may wear out extremely rapidly.
2. The hose may be susceptible to water leakage, necessitating frequent replacement.

TOYOTA GENUINE PARTS

Offer Added Safety on:
e.g.Lift Roller
Lift Chain
Tie-rod End
Brake Shoe

IF YOU USE A NON-GENUINE BRAKE SHOE:
1. Braking performance may be excessive, insufficient, or erratic, which is dangerous.
2. The brakes may drag. wasting fuel or battery power.

Call your Toyota authorized shop for after-sale service.

With high quality TOYOTA genuine parts and superior service technology, Toyota help keep customers forklifts in the best condition for efficient work and higher productivity. We deliver satisfaction to the customers with Toyota genuine part.

PERIODIC MAINTENANCE TABLE

Periodic maintenance

INSPECTION METHOD

I: Inspect and correct and replace as required. T: Tighten C: Clean L: Lubricate M: Measure and correct and adjust as required.

INSPECTION PERIOD (Accomplish based on operating hours or month, whichever is soonest.)	EVERY	6 WEEKS	3	6	12	MONTHS
	EVERY	250	500	1000	2000	HOURS
ENGINE						
Basic components						
1. Starting condition and unusual noise		I*	I	←	←	
2. Rotating condition during idling		M*	M	←	←	
3. Rotating condition during acceleration		M*	M	←	←	
4. Exhaust gas condition		I*	I	←	←	
5. Air cleaner element		C*	C	←	←	
6. Valve clearance		M*			M	
7. Compression					M	
8. Cylinder head bolt					T	
9. Muffler rubber mount					I	
Blow by gas reduction device						
10. Clogging and damage of PCV valve and piping		I*	I	←	←	
Governor						
11. Maximum no-load stabilized rotation speed		M*	M	←	←	
Lubrication system						
12. Oil leakage		I*	I	←	←	
13. Oil level		I*	I	←	←	
14. Clogging and fouling of oil filter			I	←	←	
Fuel system						
15. Fuel leakage		I*	I	←	←	
17. Fouling and damage of fuel filter element			I	←	←	
18. Injection timing				M	←	
19. Injection nozzle injection pressure and condition					M	
20. Draining of sedimenter				I	←	
Cooling system						
21. Radiator coolant level and leakage		I*	I	←	←	
22. Rubber hose deterioration		I*	I	←	←	
23. Radiator cap condition		I*	I	←	←	
24. Fan belt tension and damage		I*	I	←	←	
25. Radiator rubber mount					I	

INSPECTION PERIOD (Accomplish based on operating hours or month, whichever is soonest.)	EVERY	6 WEEKS	3	6	12	MONTHS
	EVERY	250	500	1000	2000	HOURS
Three-way exhaust emission control system						
26. Exhaust gas (carbon monoxide) concentration measurement					M	
27. Exhaust system piping joint loosening and damage					I	
28. Vacuum piping damage			I	←	←	
29. Vacuum sensor damage					I	
30. Injector cleaning and damage					I	
31. Register damage					I	
32. ABCV damage					I	
33. Water temperature sensor damage					I	
34. Oxygen sensor damage					I	
Auto speed control device (Option)						
35. Step motor damage			I	←	←	
36. Accelerator pedal sensor and switch damage			I	←	←	
37. Speed sensor damage					I	
POWER TRANSMISSION SYSTEM						
Differential						
1. Oil leakage			I	←	←	
2. Oil level			I	←	←	
3. Loose bolts					T	
Torque converter and transmission						
4. Oil leakage			I	←	←	
5. Oil level			I	←	←	
6. Operating mechanism function and looseness			I	←	←	
7. Control valve and clutch function			I	←	←	
8. Inching valve function			I	←	←	
9. Stall test and oil pressure measurement				M	←	
Propeller shaft and axle shaft						
10. Loosening of joint			T	←	←	
11. Looseness at spline connection					I	
12. Looseness at universal joint					I	
13. Twisting and cracks of axle shaft					I	
RUNNING EQUIPMENT						
Wheels						
1. Tire air pressure			M	←	←	
2. Tire cuts, damage and uneven treads			I	←	←	
3. Loose rim and hub nuts			T	←	←	
4. Tread depth		M*	M	←	←	
5. Metal fragments, stones or other foreign objects in tires		I*	I	←	←	

INSPECTION PERIOD (Accomplish based on operating hours or month, whichever is soonest.)	EVERY	6 WEEKS	3	6	12	MONTHS
	EVERY	250	500	1000	2000	HOURS
6. Rim, side ring and disc wheel damage		I*	I	←	←	
7. Front wheel bearing unusual noise and looseness		I*	I	←	←	
8. Rear wheel bearing unusual noise and looseness		I*	I	←	←	
Front axle						
9. Housing cracks and damage					I	
Rear axle						
10. Beam cracks, damage and deformation					I	
11. Axle beam forward and backward direction looseness					M	
STEERING SYSTEM						
Steering wheel						
1. Play and looseness		I*	I	←	←	
2. Operating condition		I*	I	←	←	
Steering valve						
3. Oil leakage		I*	I	←	←	
4. Mounting looseness		T*	T	←	←	
Power steering						
5. Oil leakage			I	←	←	
6. Mounting and linkage looseness			I	←	←	
7. Power steering hose damage					I	
Knuckle						
8. King pin looseness			I	←	←	
9. Cracking and deformation					I	
BRAKING SYSTEM						
Brake pedal						
1. Play and reserve			M	←	←	
2. Braking effect			I	←	←	
Parking brake						
3. Operating force			I	←	←	
4. Braking effect			I	←	←	
5. Linkage and cable looseness and damage		I*	I	←	←	
Brake pipe and hose						
6. Leakage, damage and mounting condition			I	←	←	
Brake oil						
7. Level		I	←	←	←	
Master cylinder or wheel cylinder						
8. Function, wear, damage and mounting looseness					I	

INSPECTION PERIOD (Accomplish based on operating hours or month, whichever is soonest.)	EVERY	6 WEEKS	3	6	12	MONTHS
	EVERY	250	500	1000	2000	HOURS
Brake drum and brake shoe						
9. Clearance between drum and lining			M	←	←	
10. Shoe sliding portion and lining wear					I	
11. Drum wear and damage					I	
12. Shoe operating condition					I	
13. Anchor pin rusting					I	
14. Return spring wear, etc.					M	
15. Automatic adjusting function operation					I	
Backing plate						
16. Deformation cracking and damage					I	
17. Mounting looseness					T	
LOAD HANDLING SYSTEM						
Forks						
1. Forks and stopper pin condition			I	←	←	
2. Left and right forks uniformity			I	←	←	
3. Cracks in forks base and welded portion					I*[1]	
Mast and lift bracket						
4. Deformation, damage and cracks in welded portion			I	←	←	
5. Mast and lift bracket looseness			I	←	←	
6. Mast support bushing wear and damage					I	
7. Roller wear, damage and rotating condition			I	←	←	
8. Roller pin wear and damage					I	
9. Mast strip wear and damage			I	←	←	
Chain and chain wheel						
10. Chain tension, deformation and damage		I*	I	←	←	
11. Chain lubrication			I	←	←	
12. Elongation of chain					I	
13. Chain anchor bolt condition			I	←	←	
14. Chain wheel wear, damage and rotating condition			I	←	←	
Various attachments (Option)						
15. Abnormalities and mounting condition			I	←	←	

INSPECTION PERIOD (Accomplish based on operating hours or month, whichever is soonest.)	EVERY	6 WEEKS	3	6	12	MONTHS
	EVERY	250	500	1000	2000	HOURS
HYDRAULIC SYSTEM						
Cylinder						
1. Cylinder mounting looseness and damage			T	←	←	
2. Rod and rod screw and rod end deformation and damage			I	←	←	
3. Cylinder operation			I	←	←	
4. Natural drop and natural forward tilt			M	←	←	
5. Oil leakage and damage			I	←	←	
6. Pin and cylinder shaft support wear and damage			I	←	←	
7. Lifting speed			M	←	←	
8. Uneven movement			I	←	←	
Oil pump						
9. Oil leakage and unusual noise			I	←	←	
Hydraulic oil tank						
10. Oil level and contamination			I	←	←	
11. Tank and oil strainer				C	←	
12. Oil leakage			I	←	←	
Control lever						
13. Linkage looseness			I	←	←	
14. Operation			I	←	←	
Oil control valve						
15. Oil leakage			I	←	←	
16. Relief pressure measurement					M	
17. Relief valve and tilt lock valve function			I	←	←	
Oil pressure piping						
18. Oil leakage			I	←	←	
19. Deformation and damage			I	←	←	
20. Linkage looseness			T	←	←	
ELECTRICAL SYSTEM						
Ignition system						
1. Distributor cap cracking		I*	I	←	←	
2. Spark plug burning and gap		I*	I	←	←	
3. Distributor side terminal burning		I*	I	←	←	
4. Distributor cap center piece wear and damage		I*	I	←	←	
5. Plug cord internal disconnection					I	
6. Ignition timing				M	←	
Starter						
7. Pinion gear meshing			I	←	←	
Charger						
8. Charging effect		I*	I	←	←	

INSPECTION PERIOD (Accomplish based on operating hours or month, whichever is soonest.)	EVERY	6 WEEKS	3	6	12	MONTHS
	EVERY	250	500	1000	2000	HOURS
Battery						
9. Battery electrolyte level			I	←	←	
10. Specific gravity				M	←	
Electrical wiring						
11. Wiring harness damage			I	←	←	
12. Fuses			I	←	←	
Preheater						
13. Glow plug heat coil breakage				I	←	
14. Open circuit in intake heater				I	←	
DPF muffler (Option)						
15. Filter				I	←	
16. Inline filter (for back pressure sensor)			I	←	←	
17 DPF valve					C	
SAFETY DEVICES, ETC.						
Head guard						
1. Welded portion cracking			I	←	←	
2. Deformation and damage			I	←	←	
Back rest						
3. Mounting looseness			T	←	←	
4. Deformation, cracking and damage			I	←	←	
Lighting system						
5. Operation and mounting condition			I	←	←	
Horn						
6. Operation and mounting condition			I	←	←	
Instrument						
7. Operation			I	←	←	
Back-up buzzer (Option)						
8. Operation and mounting condition			I	←	←	
SAS						
9. Operation			I	←	←	
10. Looseness at and/or damage to sensor fittings			I	←	←	
11. Damage to, deformation of and/or oil leakage at functional parts and loosening mounting			I	←	←	
12. Looseness at and/or damage to wire harness			I	←	←	
13. Performance of lock cylinder and/or accumulator					I	

INSPECTION PERIOD (Accomplish based on operating hours or month, whichever is soonest.)	EVERY	6 WEEKS	3	6	12	MONTHS
	EVERY	250	500	1000	2000	HOURS
OPS						
15. Function			I	←	←	
Seat						
16. Mounting looseness and damage			I	←	←	
17. Damage to and/or operation of seat belts			I	←	←	
18. Operating condition of seat switch			I	←	←	
Body						
19. Frame, cross member, etc. damage and cracking					I	
20. Bolt looseness					T	
Cabin (Option)						
21. Deformation, cracks and damage			I	←	←	
22. Cracks in welds			I	←	←	
23. Deterioration and cracking of weather-stripping, silicon adhesive					I	
24. Deterioration and damage to the cabin mounting rubber material					I	
Rear-view mirror (Option)						
25. Dirt, damage			I	←	←	
26. Rear reflection status			I	←	←	
Others						
27. Lubrication (See Lubrication Chart Chapter)		L	←	←	←	

*: For new vehicle
*1: Fissure and crack detector

Note:
In case of the hard operating condition, the service interval of 170 hours or 1 month may be recommended.

SERVICE DATA

Adjustment value table

Item	Models				1.5 ton series	1.75 ton series	K2.0 ton series	2.0–2.5 ton series	3 ton series	J3.5 ton series
Fan belt tension (10 kg (22 lb.) pressure applied)	mm (in)				8–13 (0.31–0.51)	←	←	←	←	←
Spark plug gap	mm (in)		4Y		0.7–0.8 (0.028–0.031)	←	←	←	←	←
Spark plug type			4Y		W9EXR-U	←	←	←	←	←
Ignition timing (BTDC)	deg/rpm		4Y		7/750	←	←	←	←	←
Ignition sequence			4Y		1-3-4-2	←	←	←	←	←
Fuel injection timing (BTDC)	mmlift/TDC		1DZ-III•1DZ-II		0.77	←	←	←	←	←
			3Z		0.90	←	←	←	←	←
Fuel injection sequence			1DZ-III•1DZ-II•3Z		1-3-4-2	←	←	←	←	←
Valve clearance (When warm)	mm (in)	IN.	4Y		0 (Self adjusting)	←	←	←	←	←
			1DZ-III•1DZ-II		0.18–0.22 (0.007–0.009)	←	←	←	←	←
			3Z		0.15–0.25 (0.006–0.010)	←	←	←	←	←
		EX.	4Y		0 (Self adjusting)	←	←	←	←	←
			1DZ-III•1DZ-II		0.33–0.37 (0.013–0.015)	←	←	←	←	←
			3Z		0.31–0.41 (0.012–0.016)	←	←	←	←	←
Idling speed	rpm		4Y		750 ± 30	←	←	←	←	←
			1DZ-III•1DZ-II		750 ± 30	←	←	←	←	←
			3Z		–	–	–	775 ± 30	←	←
No load maximum speed	rpm		4Y		2570 ± 35	←	←	←	←	←
			1DZ-III•1DZ-II		2600 ± 50	←	←	←	←	←
			3Z		–	–	–	2400 ± 50	←	←
Engine compression	MPa/rpm (psi/rpm)	Standard value	4Y		1.2/250 (174/250)	←	←	←	←	←
			1DZ-III		3.3/260 (479/260)	←	←	←	←	←
			1DZ-II		2.8/260 (412/260)	←	←	←	←	←
			3Z		3.9/260 (566/260)	←	←	←	←	←
		Limit	4Y		0.9/250 (131/250)	←	←	←	←	←
			1DZ-III		2.6/260 (377/260)	←	←	←	←	←
			1DZ-II		2.0/260 (284/260)	←	←	←	←	←
			3Z		3.5/260 (508/260)	←	←	←	←	←
Tire air pressure	kg/cm^2 (psi)	Front wheels	Single		7.0 (102)	←	9.0 (131)	7.0 (102)	←	8.5 (123)
			Side ring rim		8.0 (116)	9.0 (131)	←	9.0 (131)	8.0 (116)	9.5 (138)
			Special double	Brigestone	7.0 (102)	←	–	7.0 (102)	←	7.0 (100)
				Continental	8.0 (116)	←	–	9.0 (131)	–	–
		Rear wheels	Single		8.0 (116)	←	7.5 (109)	7.0 (100)	7.75 (110)	9.0 (131)
			Divided rim		8.0 (116)	←	–	8.0 (116)	–	–
			Side ring rim	Brigestone	8.0 (116)	←	7.5 (109)	8.5 (123)	–	–
				Continental	8.0 (116)	←	10.0 (145)	8.5 (123)	8.0 (116)	9.0 (131)
Steering wheel play (When idling)	mm (in)				20–50 (0.79–1.97)	←	←	←	←	←
Oil control valve set pressure	kg/cm^2 (psi)		Lift		182 (2580)	←	←	191 (2710)	←	←
			Tilt		120 (1710)	←	←	160 (2280)	←	←
Brake pedal play	mm (in)				1–5 (0.04–0.20)	←	←	←	←	←
Brake pedal floor clearance	mm (in)				135 (5.31) or more	←	←	←	←	←
Inching and brake pedal play	mm (in)				1–3 (0.039–0.12)	←	←	←	←	←

Item	Models		1.5 ton series	1.75 ton series	K2.0 ton series	2.0–2.5 ton series	3 ton series	J3.5 ton series
Sound pressure level (L_{PA}) in accordance with EN 12053* Uncertainty K=4 dB (A)	dB (A)	4Y-E	77	77	77	77	77	77
		1DZ-III•3Z	79	79	79	79	79	79

***Note:**

- The vibration values shown above are obtained from the measurements in accordance with EN 13059.
- The magnitude of hand arm vibration of lift trucks is 2.5 m/s^2 or below as defined in EN 13059.
- The whole body vibration values shown above cannot be used for calculating 8 hour vibration exposure in 2002/44/EC (Vibration Directive). (If calculated according to the general forklift operation pattern, the result will be lower than 0.5 m/s^2.)
- The sound pressure values shown above can be used as the sound level at operators' ears. (Values are in accordance with EN 12053 measurement methods.)

Adjustment value table

Item	Models			1.5–1.75 ton series	K2.0 ton series	2.0–2.5 ton series	3.0–J3.5 ton series
Hub nut tightening torque	N-m (kg-m) [ft-lb]	Front wheels	Single tire	118–196 (12–20) [87–145]	177–392 (18–40) [130–289]	←	294–588 (30–60) [217–434]
			Double tire	177–392 (18–40) [130–289]	–	177–392 (18–40) [130–289]	294–588 (30–60) [217–434]
		Rear wheels	Divided rim	89–157 (9–16) [65–116]	118–196 (12–20) [87–145]	118–196 (12–20) [87–145]	←
			Side ring rim	89–157 (9–16) [65–116]	118–196 (12–20) [87–145]	177–392 (18–40) [130–289]	118–196 (12–20) [87–145]
Divided rim set bolt tightening torque	N-m (kg-m) [ft-lb]			30–44 (3–4) [21–32]	79–118 (8–12) [58–86]	49–69 (5–7) [36–50]	←
Battery electrolyte specific gravity 20°C (°F)				1.28			

Lubricant capacities and types

Item	Models			1.5–1.75 ton series	K2.0 ton series	2.0–2.5 ton series	3.0–J3.5 ton series	Type
Engine oil	ℓ (US. gal)	Gasoline	4Y	4.0 (1.06)	←	←	←	API SL,SM
		Diesel	1DZ-III• 1DZ-II	7.9 (2.09)	←	←	←	API : CF-4
			3Z	–	–	9.4 (2.48)	←	
Torque converter	ℓ (US. gal)	1 speed		6.0 (1.58)	←	←	←	ATF GM Dexron II
		2 stator		10.0 (2.64)	←	←	←	
Differential gear	ℓ (US. gal)			5.8 (1.53)	←	6.1 (1.61)	8.2 (2.16)	API GL-4, GL-5 Hypoid gear oil SX90 (Russian spec: SHELL SPIRAX GSX75W-80)
Fuel tank	ℓ (US. gal)			45 (11.9)	←	60 (15.8)	←	
Wheel bearings, chassis, tilt steering and mast and grease fittings				Appropriate amount				MP Grease
Brake line	ℓ (US. gal)			0.2 (0.05)	←	←	←	SAE J-1703 DOT-3
Engine cooling system (excluding reserve tank)	ℓ (US. gal)	4Y		8.4 (2.22)	←	8.5 (2.24)	9.7 (2.56)	Toyota Super LLC*
		1DZ-III•1DZ-II•3Z		7.0 (1.85)	←	8.4 (2.22)	←	
Radiator reserve tank (at FULL mark level)	ℓ (US. gal)			0.47 (0.124)	←	←	←	
Hydraulic oil	ℓ (US. gal)			30 (7.9)	←	33 (8.7)	34 (9.0)	ISO VG 32

* Toyota Super LLC = Toyota Super Long Life Coolant (Appropriately diluted with fresh water)
The hydraulic oil level pertains to the V-mast with a lift of 3,000 mm.

Note:

The LLC has changed to Toyota Super LLC (used also for Toyota Cars).
In connection we have the following requirement:

a. Do not use only water.
b. Use of improper engine coolant may damage the engine coolant system.
c. Use only Toyota Super LLC or similar high quality specifications:
   - ethylene glycol based non-silicate
   - non-amine
   - non-nitrite
   - non-boratic engine coolant with long-life hybrid organic acid technology.

Note that coolant with long-life hybrid organic acid technology consists of a combination of low phosphates and organic acids.

LPG DEVICE (OPTION)

NAMES OF LPG DEVICE COMPONENTS

1. Tank band
2. LPG tank
3. Tank bracket
4. Regulator
5. Filter
6. Solenoid valve
7. LPG switch

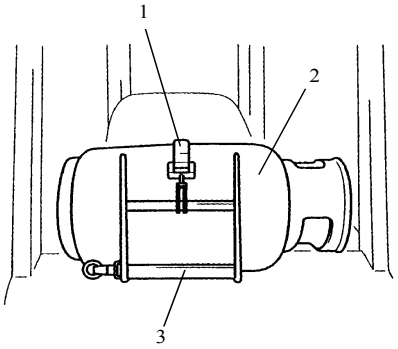

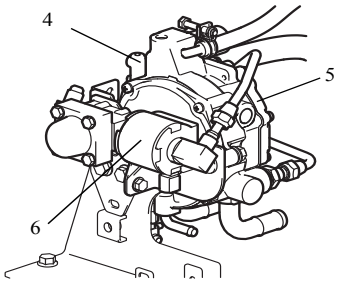

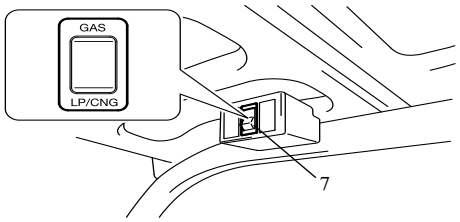

SWITCHES

Fuel Switch

Fuel switch (Gasoline/LPG models)

This is a switch to turn on and off the LPG or gasoline fuel feeder.

OFF . . .horizontal position
Engine cannot be started up since no fuel is fed.

LPG . . .low position

GAS . . .upper position

Note:

- With the ignition switch OFF, no fuel will be fed even if the fuel switch is positioned at LPG or GAS.
- To turn off the LPG model engine, turn the fuel switch OFF, and run the engine until it naturally stops. After the engine has stopped, take out the gas tank, close the valve, turn the ignition switch OFF, and remove the key.

LPG fuel warning system (France spec: Option)

When the LPG level inside LPG tank gets low, the warning lamp will come on and the buzzer will sound to let operator know. Once the fuel warning system operates, feasible drive time is approximately 2 minutes (approximately 350m).

Note:

- Once the fuel warning system operates, replenish the fuel.
- When the fuel warning system operates, feasible drive time is slightly different depending on work form, ambient temperature and LPG components.

LPG TANK AND RELATED PARTS

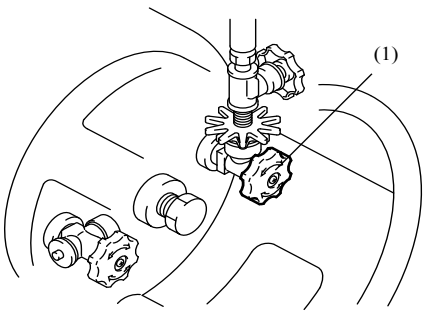

(1) Outflow valve

Outflow valve

This valve controls the flow of LPG fuel from the LPG tank to the regulator.

To open the valve . . Turn it counterclockwise.

To shut the valve. . . . . Turn it clockwise.

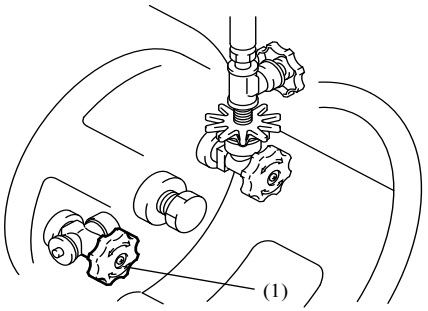

(1) Inflow valve

Inflow valve

LPG is filled in the tank through this valve. The tank must be filled by an LPG filling station attendant. Be sure that this valve is shut tightly at all times during use.

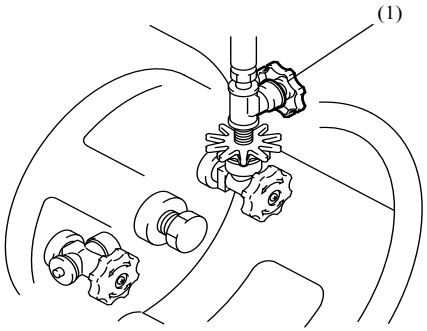

(1) Pipe valve

Pipe valve

When the fuel hose needs to be disconnected for tank replacement, etc., close this valve to prevent the liquid from running out of the hose.

This valve is normally left open.

To open the valve. . .Turn it counterclockwise.

To shut the valve . . . . . .Turn it clockwise.

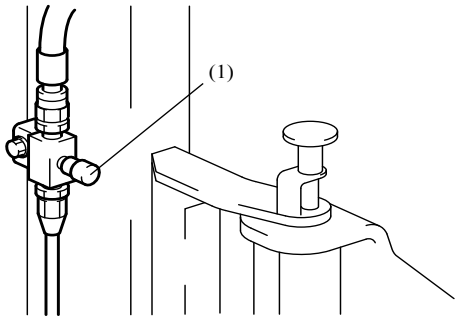

(1) Relief valve

Relief valve

This valve prevents explosion that might be caused when the LPG pressure rises above a normal level or when the hose becomes deteriorated.

OPERATING LPG-POWERED FORKLIFTS

Starting the engine (LPG models)

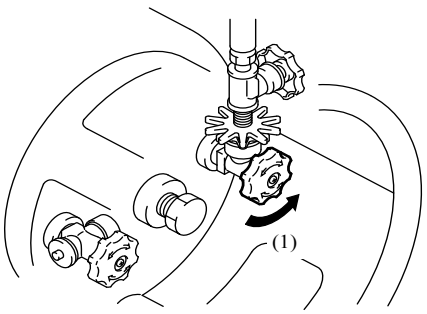

(1) Open

1. Turn the outflow valve of the tank counterclockwise to open it.

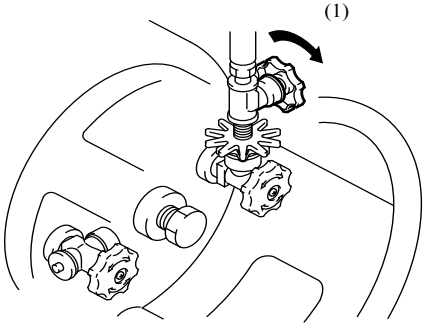

(1) Open

2. Be sure that the pipe valve is open.

⚠ **Caution**

Never depress the accelerator pedal repeatedly or hold it down completely during starting. The engine will not start easily.

3. Wait for an initial ignition of the engine, and depress the accelerator pedal lightly. Wait for the engine to start running, and set the ignition switch to the "I" (ON) position.
4. Let the engine idle for 5 to 6 minutes.

⚠ **Caution**

Never depress the accelerator pedal completely. It will send an extra amount of LPG and its heat of vaporization may freeze the regulator and damage the engine.

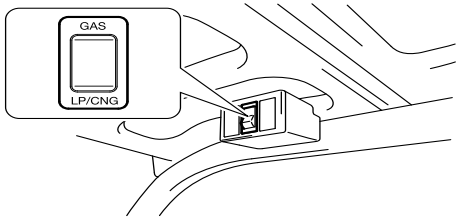

Starting the engine (Gasoline/LPG models)

If the ambient temperature is sufficiently high, start the engine the same way as you would start the engine of LPG models. If the temperature is very low and starting the engine is difficult with LPG fuel, set the fuel switch to the GAS position and start the engine. Change the fuel setting to the LPG position after the engine becomes hot (stop the engine first).

1. Set the fuel switch to the GAS position.
2. Start and warm up the engine as you would start and warm up an ordinary gasoline engine.
   See the other Operator's Manual for engine starting procedures.
3. Set the fuel switch to the OFF position and let the engine stop naturally.
4. Set the fuel switch to the LPG position and start the engine again as you would start the engine of LPG models.

⚠ **Caution**

Never change the fuel switch setting from GAS to LPG positions while the engine is running. It will increase the engine rev sharply and cause a serious damage to the engine.

To prolong the engine life

Refrain from handling and driving the vehicle roughly especially when it is new.

Parking

1. Parking for a short time.

(1) Turn the fuel switch to the OFF (go-out) position.

(2) Let the engine stop naturally so that any LPG fuel in the piping leaves the system. Turn the ignition switch to the "O" (OFF) position and remove the key.

2. Parking for a long time.

(1) Turn the LPG tank outflow valve clockwise to shut the fuel supply.

(2) Let the engine stop naturally so that any LPG fuel in the piping leaves the system. Turn the fuel switch and the ignition switch to the "O" (OFF) position and remove the key.

Changing the LPG tank

⚠ Caution

Under no circumstances what so ever may the LPG tank replacement be performed near a lighted cigarette, lighted match, gas stove burner, electric heater, motor or any other electric appliance that emits sparks, flame or any type of fire (referred to collectively as "fire" below).

⚠ Warning

To avoid serious injury from fire or explosion, you must follow these rules:

- **Switch ignition and lights off.**
- **Change tanks only in well ventilated, approved areas.**
- **No fire or flames allowed.**
- **Check all connections for damage or missing parts.**
- **Check for leaks.**
- **Do not restart until all smell of gas is gone.**
- **If vehicle will not restart, get a mechanic to inspect it.**
- **Filling tanks requires special procedures.**
  Make sure someone explains them all to you.

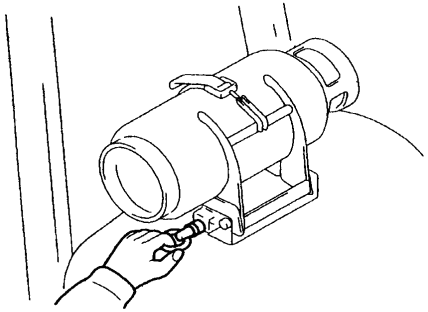

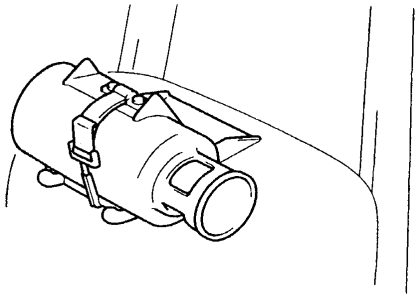

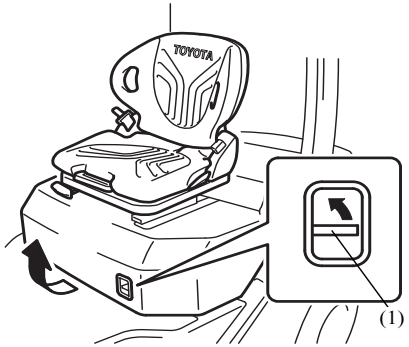

(1) Engine hood lock release lever

Engine hood

Opening

1. Pull the set pin at the bottom left portion of the tank bracket.

2. Bring the clamped tank with the bracket down toward the rear side of the vehicle.

3. Pulling up on the engine hood lock release lever will release the engine hood lock, and the engine hood will pop up slightly.
4. Lift the engine hood.
5. Open the engine hood all the way, then shake the hood slightly to check that the hood damper has been securely fastened before letting go.

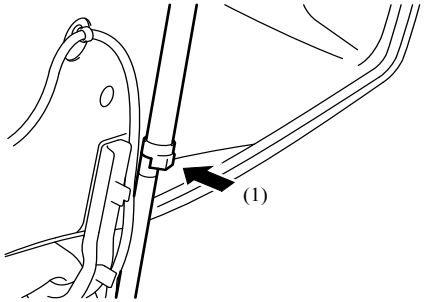

(1) Push

Closing

1. Lift up the engine hood and press the hood damper lock to release the lock.
2. Close the engine hood quietly, and press down on the hood until you hear a clicking sound.

⚠ **Caution**

Working on the engine without firm locking of the hood may be hazardous.

Removing the LPG tank

1. Stop the engine according to instructions for "Parking for a long time".

(1) Turn the LPG tank outflow valve clockwise to shut the fuel supply.

(2) Let the engine stop naturally. Turn the fuel switch to the "O" (OFF) position.

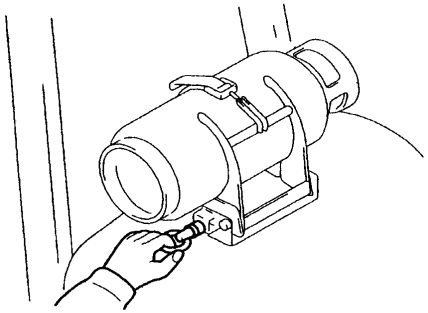

3. Disconnect the piping from the LPG tank (turn the screw counterclockwise).
4. Pull the set pin at the bottom left portion of the tank bracket.

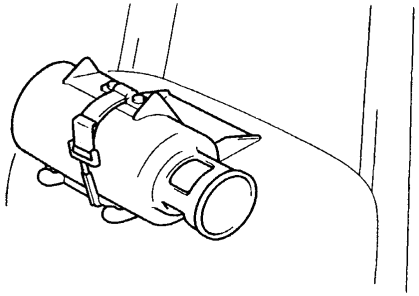

5. Bring the clamped tank with the bracket down toward the rear side of the vehicle.

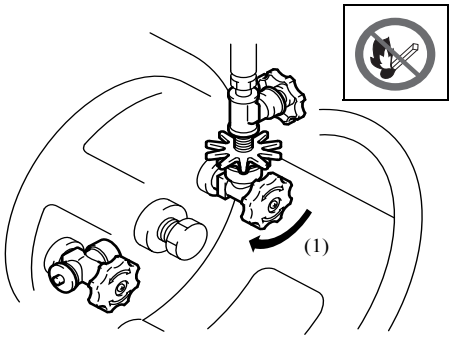

(1) Close

2. Turn the pipe valve clockwise to shut it.

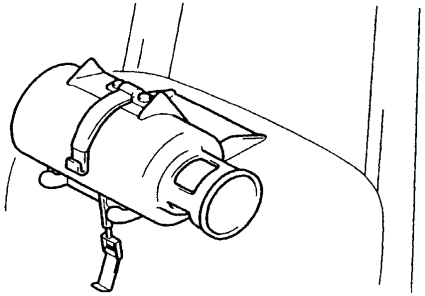

6. Pull the tank clamp toward you to release the band locks.
7. Push the bands away from you and remove the tank.

en

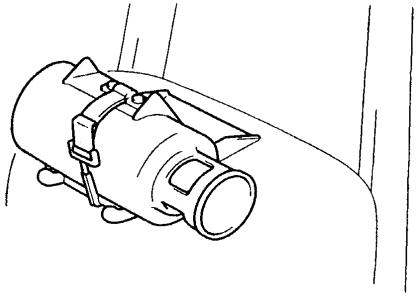

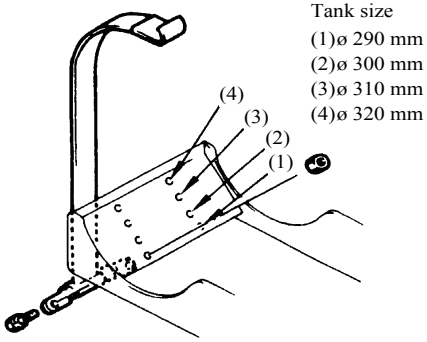

Tank size
(1)ø 290 mm
(2)ø 300 mm
(3)ø 310 mm
(4)ø 320 mm

Installing the tank

1. Hook the clamps on the bands and raise the clamps.

2. Return the tank bracket toward the front side of the vehicle and see that set pin is locked.

Note:
Adjust the band position according to the tank size.

3. Install the piping securely on the service valve and check for bubbles indicating.
4. Do not try to start engine until all gas smell is gone.

⚠ **Warning**
If any gas leakage is found, immediately report to the supervisor for repair by a qualified mechanic or your Toyota dealer. Tag vehicle "out of service".

⚠ **Caution**
Always wipe soapy water off after the inspection.

Important information about properties of LPG

- **LPG normally contains a substance that gives it a noticeable odor in concentration of 1/200 or more in air.**
  If a large amount of the LPG is leaking from the tank of the system, it can be detected by the smell. LPG does not contain carbon monoxide and is not poisonous although it is explosive.
- **LPG is a highly pressurized gas and leaks very easily.**
  The vapor has a volume 250 times that of the liquefied gas and it twice as dense as air. Therefore, it collects in low places.
- **LPG increases in pressure as the temperature increases.**

Safety precautions about operating LPG-powered forklifts

- **LPG is inflammable. A tiny spark can cause a fatal explosion if it is handled carelessly. It is very crucial that the following precautions are observed most strictly to avoid hazards.**
- **All LPG-powered forklifts must be operated and maintained (including the LPG tank renewal) by designated persons only.**
- **Never stop or park an LPG-powered forklift near fire.**
- **Whenever possible, do not stop or park an LPG-powered forklift in direct sunlight. Covering it with a sheet highly recommendable. And make sure the vehicle is well ventilated.**
- **Do not operate an LPG-powered forklift in the presence of fire.**
- **When operating or inspecting an LPG-powered forklift, post a large "FIRE HAZARD" sign and make sure that persons using fire do not approach the vehicle.**
- **Remove the ignition key from an LPG-powered forklift before parking or storing it so that no unauthorized person can operate it.**
- **Use only soap water or neutral detergent to check the vehicle for gas leaks. Do not use any other fluid.**
- **If the gas leak inspection must be performed at night with the help of a flashlight, turn the flashlight on far away from the vehicle and walk toward it. The flashlight might cause a spark when it is turned on and cause an accident.**
- **If a gas leak is detected, immediately put out any fire, ventilate the area and keep the area in a strictly fire free condition. Then call a qualified Toyota dealer or service garage.**
- **Store LPG tanks in a strictly free area having a gas detector at all times.**
- **Have LPG tanks refilled only by an LPG gas filling station attendant.**
- **Use LPG of an appropriate chemical composition according to the climate. In hot climate, use LPG with a relatively high butane content; in cold climate, use LPG with a relatively high propane content.**

SERVICING THE REGULATOR

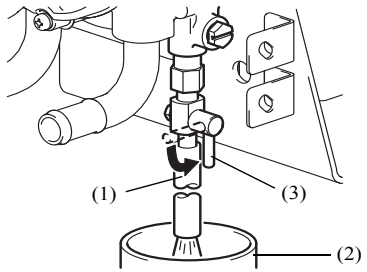

(1) Hose
(2) Oil pan
(3) Drain cock (Option)

Removing tar from the regulator

Tar tends to collect in the regulator and it must be removed regularly on a weekly basis when the day's work is finished. Let the engine cool down, and remove tar as started below.

1. Set the fuel switch to the "O" (OFF) position and open the engine hood.
2. Connect a hose to the drain cock located under the regulator.
3. Put an oil pan under the drain cock. Open the drain cock and let tar drop into the oil pan.
4. After all tar is removed from the regulator, close the drain cock and disconnect the hose.

⚠ **Caution**

If tar is adhering to the vehicle, it must be wiped off completely with a cloth.

INSPECTING AND SERVICING LPG-POWERED FORKLIFTS

Inspect and service LPG-powered forklifts as you would conventional forklifts. In addition, inspect and service them as written below.

- Inspection before Starting Operation.
- LPG gas leak check
- After the gas leak check is completed, wipe off the soap water or neutral detergent from the wet parts.
- If a gas leak is detected, immediately put out any fire, ventilate the area and keep the area in a strictly firefree condition. Then call a qualified Toyota dealer or service garage.

⚠ **Caution**

Never perform LPG gas leak checks near fire. Make certain that there is no source of fire in the area throughout the gas leak check.

⚠ **Warning**

To avoid serious injury from fire or explosion, you must follow these rules;

- **Switch ignition and lights off.**
- **Check for leaks only in well ventilated, approved areas.**
- **No smoking, fire of flames allowed.**
- **Brush soapy water on all joints, bubbles will show leaks.**
- **Never use any other liquids, or any open flame for leak checks.**
- **Do not try to start engine until all gas smell is gone.**
- **If any gas leakage is found, immediately report it to the supervisor for repair by a qualified mechanic or your Toyota dealer. The vehicle is not allowed to be operated.**

1. Turn the LPG tank outflow valve counter-clockwise to open it.
2. The pipe valve must be open also.
3. Set the ignition switch to the "I" (ON) position.
4. Turn the fuel switch "I" (ON) and "O" (OFF) repeatedly for several times, and leave it in the "O" (OFF) position finally.
5. Wet the hose and the LPG tank and regulator connections with soap water or neutral detergent. Lock for gas leak.
6. Press the fuel test bar fitted to the regulator a few times toward the outside of the vehicle.
7. Wet the hose and the regulator and carburetor connections with soap water or neutral detergent. Lock for gas leak.

■Monthly inspection and maintenance

Item
Gas leak from pipes and joints (connections)
Damage to pipes and joints (connections)
Regulator adjustment
Crack, damage to and gas leak from the tank
Loose or damaged tank bracket
Damage to electrical wiring, loose terminals
Rotation of liquid drain valve
Gas leak from the regulator body

■Quarterly inspection and maintenance

Carburetor and adaptor
Regulator function (to be disassembled and repaired every year)
Solenoid valve
Filter

LUBRICANT AND COOLANT

Engine oil

Use SAE 30 motor oil (SAE 20 in cold weather).
Replace the oil once a month.

Cooling water

Use a mixture of equal parts of water and a Toyota Super Long-Life Coolant.
Change the cooling water every two years.

ENGINE SPECIFICATIONS

Item		Engine	4Y-E		4Y-M	
			a	b	a	b
Gasoline/LPG models	Max. power	PS/rpm	48/2400	52/2600	54/2400	58/2600
	Max. torque	kg/rpm	15/1600	←	16.5/1800	←
	Ignition timing	BTDC°/rpm	7°/750	←	←	←
	Idling speed	rpm	750	←	750	←
	Max. no-load rev	rpm	2600	2800	2600	2800
LPG models	Max. power	PS/rpm	50/2400	54/2600	48/2400	52/2600
	Max. torque	kg/rpm	16/1800	←	15/1600	←
	Ignition timing	BTDC°/rpm	7°/750	←	←	←
	Idling speed	rpm	750 ± 30	←	750^{+50}_{-0}	←
	Max. no-load rev	rpm	2570 ± 35	←	2600 ± 50	2800 ± 50

a: 4Y engine-powered, 1.0-2.5, K2 ton class pneumatic tire vehicles
b: 4Y engine-powered, 3.0 ton class pneumatic tire vehicles

WHEEL & TIRE

Model	Tire Arrangement		Pneumatic Tire				Pneumatic-shaped Cushion Tire				
			Tire size	Rim	Bridgestone	Continental	Tire size	Rim	Bergougnan	Continental	Aichi
1.5-1.75 ton series	Front	Single	6.50-10-10PR	A	–	–	6.50-10	A	△	△	–
			6.50-10-14PR	A	–	●		A	△	△	–
		Special Double	6.00-9-10PR	A	○	–	6.00-9	A	△	△	–
			6.00-9-12PR	A	–	△					
	Rear		5.00-8-8PR	B	△	●	5.00-8	B	△	△	–
				A	△	△		A	△	△	–
2.0-2.5 ton series	Front	Single	7.00-12-12PR	A	–	–	7.00-12	A	△	△	–
			7.00-12-14PR	A	–	●		A	△	△	–
		Special Double	7.00-12-12PR	A	○	–		A	△	△	–
			7.00-12-14PR	A	–	△		A	△	△	–
	Rear		6.00-9-10PR	B	△	–	6.00-9	B	△	△	–
				A	△	–					
			6.00-9-12PR	B	–	●		A	△	△	–
				A	–	△					
K2.0 ton series	Front	Single	21x8-9-14PR	A	–	●	21x8-9	A	△	△	–
	Rear		18X7-8-10PR	B	–	–	18X7-8	B	△	△	–
				A	–	–		A	△	△	–
			18X7-8-16PR	A	–	●		A	△	△	–
3.0 ton series	Front	Single	28X9-15-12PR	A	–	–	28x9-15	A	△	△	–
			28X9-15-14PR	A	–	●		A	△	△	–
		Special Double	28X8-15-12PR	A	○	–	7.00-15	A	–	–	△
	Rear		6.50-10-10PR	A	△	–	6.50-10	A	△	△	–
			6.50-10-14PR	A	–	●		A	△	△	–
J3.5 ton series	Front	Single	250-15-18PR	A	–	●	250-15	A	△	△	–
		Special Double	28X8-15-12PR	A	○	–	7.00-15	A	–	–	△
	Rear		6.50-10-12PR	A	△	–	6.50-10	A	△	△	–
			6.50-10-14PR	A	–	●					

A: Side ring rim, B: Divided rim, ●:Standard tire for model, ○:Standard tire for each type, △:Option tire

VEHICLE DIMENSIONS

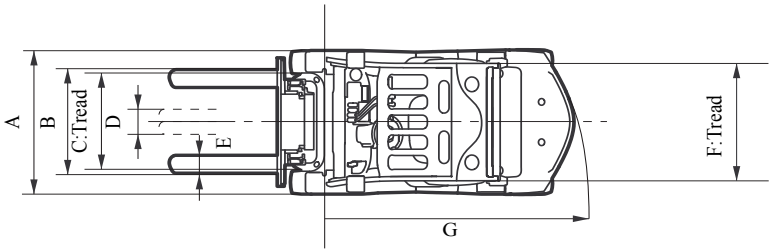

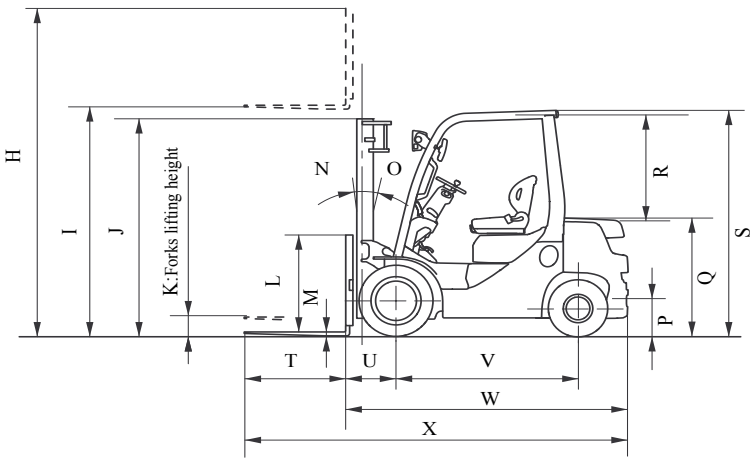

Unit: mm (in)

	02-8FGF15 02-8FDF15 32-8FGF15 62-8FDF15	02-8FGF18 02-8FDF18 32-8FGF18 62-8FDF18	02-8FGKF20	02-8FDKF20	02-8FGF20 02-8FDF20 52-8FDF20 32-8FGF20 62-8FDF20	02-8FGF25 02-8FDF25 52-8FDF25 32-8FGF25 62-8FDF25	02-8FGF30 02-8FDF30 52-8FDF30 32-8FGF30 62-8FGF30	02-8FGJF35 02-8FDJF35 52-8FDJF35 32-8FGJF35
A	1070 (42.1)	←	1155 (45.5)	←	1150 (45.3)	←	1240 (48.8)	1290 (50.8)
B	900 (35.4)	←	990 (38.9)	←	←	←	1040 (40.9)	←
C	885 (34.8)	←	960 (37.8)	←	←	←	1010 (39.8)	1060 (41.7)
D	180 (7.1)	←	225 (8.9)	←	←	←	←	←
E	80 (3.1)	←	100 (3.9)	←	←	←	←	125 (4.9)
F	895 (35.2)	←	940 (37)	←	965 (38)	←	←	←
G	1990 (78.3)	2010 (79.1)	2040 (80.3)	←	2200 (86.6)	2280 (89.8)	2430 (95.7)	2490 (98)
H	4250 (167.3)	←	←	←	←	←	4260 (167.7)	←
I	3000 (118.1)	←	←	←	←	←	←	←
J	1995 (78.5)	←	1975 (77.8)	←	1995 (78.5)	←	2010 (79.1)	2115 (83.3)
K	150 (5.9)	←	125 (4.9)	←	150 (5.9)	←	135 (5.3)	←
L	1220 (48)	←	←	←	←	←	←	←
M	40 (1.6)	←	←	←	←	←	45 (1.8)	←
N	6°	←	7°	←	6°	←	←	←
O	11°	←	10°	←	11°	←	←	←
P	285 (11.2)	←	←	←	315 (12.4)	←	335 (13.2)	←
Q	1070 (42.1)	←	1215 (47.8)	←	1095 (43.1)	1090 (42.9)	1130 (44.5)	←
R	1055 (41.5)	←	←	←	←	←	←	←
S	2080 (81.9)	←	2085 (82.1)	←	2110 (83.1)	←	2170 (85.4)	2180 (85.8)
T	1000 (39.4)	←	←	←	←	←	←	←
U	410 (16.1)	←	430 (16.9)	←	470 (18.5)	←	485 (19.1)	495 (19.5)
V	1485 (58.5)	←	←	←	1650 (65)	←	1700 (66.9)	←
W	2290 (90.2)	2315 (91.1)	2370 (93.3)	←	2575 (101.4)	2640 (103.9)	2780 (109.4)	2850 (112.2)
X	3290 (129.5)	3315 (130.5)	3370 (132.7)	3395 (133.7)	3575 (140.7)	3640 (143.3)	3780 (148.8)	3830 (150.8)

OTHER OPTIONS

REFILLABLE TANK FOR LPG DEVICE

LIST OF LPG REFILLABLE DEVICE COMPONENTS

1. Tank arch
2. LPG refillable tank
3. Tank bracket

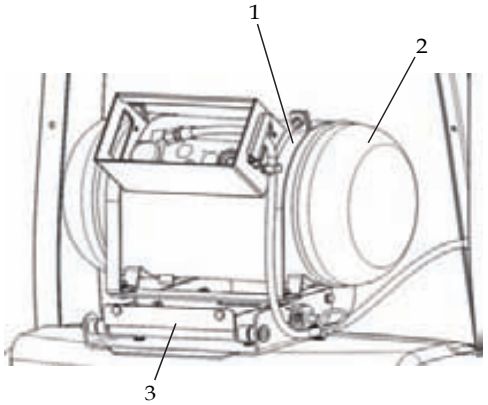

LPG TANK AND RELATED PARTS

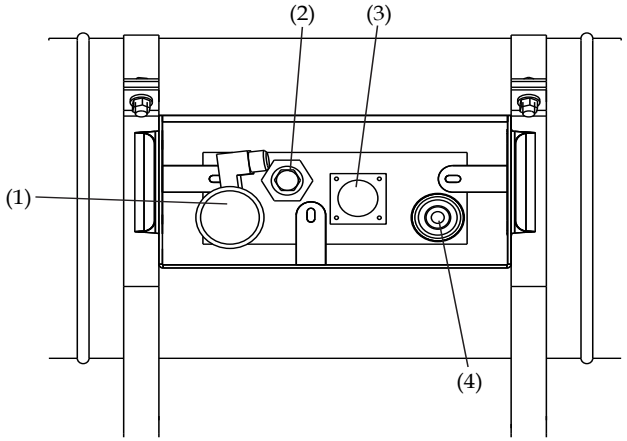

(1) Outflow valve
(2) Safety valve
(3) Inflow gauge
(4) Inflow opening

Outflow valve

This valve controls the flow of LPG fuel from the LPG tank to the regulator .
To open and close: see arrow on valve.

Inflow gauge

It indicates the current volume expressed in percentage .
The maximum safe filling is 80%.

Safety valve

This valve prevents explosion due to pressure increase in the tank.

Do not interfere with its functioning ,
Ensure that the drain is open .

Inflow opening

LPG is filled in the tank through this opening. Ensure that this opening is still closed while using the truck.

en

ENGINE HOOD

Opening

1. Pull the set pin in the right bottom part of the tank bracket.

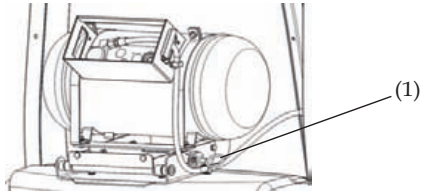

(1) Set pin

2. Tilt the tank bracket towards back using the handles (2).

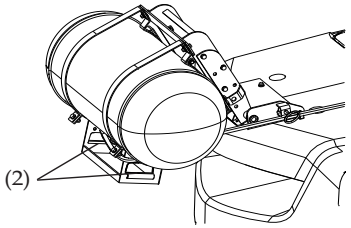

(2) Handles

3. Pull up the engine hood lock (3).

4. Lift the engine hood.

5. Open the engine hood all the way, then move the hood slightly to check that the hood damper has been securely fastened before starting.

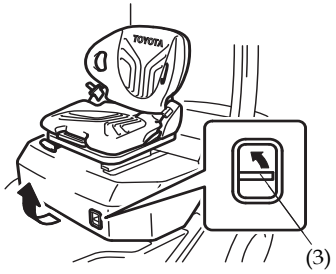

(3) Engine hood lock release lever

Closing

1. Lift up the engine hood and press the hood damper lock to release the lock.

2. Close the engine hood gently, and press down on it until hearing a clicking sound.

⚠ Caut ion
Working on the engine without a safety locking of the hood may be dangerous.

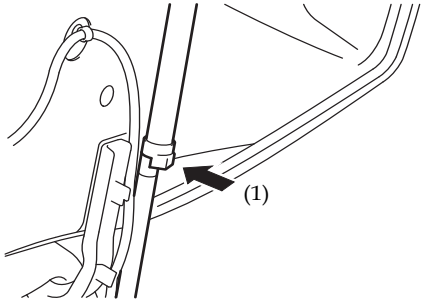

(1) Push

Removing LPG tank

Note:
To remove your refillable tank you can screw off the collar or remove the bracket.

⚠ Warning

Stop the engine as explained in "parking for a long time" section.

Installing the tank

For installation and maintenance of the refillable tank, please follow the tank manufacturer's instructions (provided with the truck).

CAR RADIO

Starting
The car radio starts when ignition key is on position ON.

Stop
The car radio stops automatically when the ignition key is on position OFF.

For the use and the maintenance of the car radio, please follow the manufacturer's instructions (provided on the truck).

ENGINE CUT-OFF TIMER

Your truck is equipped with an engine cut-off timer device. This system stops various functions on the truck after the absence of the driver during a determinated period. There are two releases of the device (V2 or V3 on the box) with the same functioning.

MODEL N°
V2 or V3

Functions stopped with the system:

- Engine
- Front headlights
- Rear lights
- Rear working light
- Turn signal
- Flashing / rotary beacon
- Hourmeter
- 3 way catalytic
- Horn
- DPF instrumentation
- Instruments lightening
- SAS system

If Steel cabin option:

- Front and rear wiper
- Windscreen washer pump
- Room lamp
- Car radio
- Heater turbine
- Cooler turbine

Time setting

The device starts the temporization as soon as the driver leaves the seat (the sensor is in the seat).

1. Take off the cover using a little flat screwdriver in position (1), do not open by an other way .

2. Locate the time setting (2) and check the connections of the harness (3)/(4).

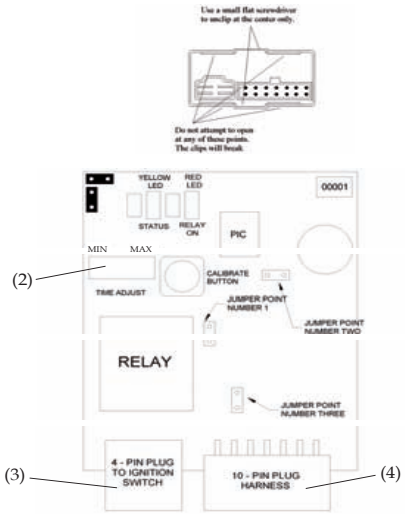

3. Switch on the ignition key without starting the engine, the red diode lights and the green diode (V2) or yellow diode (V3) blinks according to the time setting (see table opposite) .

POS.	Duration	Flashes
1	30 sec.	1 time + 1 time
2	1 mn.	1 time + 2 times
3	2 mn.	1 time + 3 times
4	3 mn.	1 time + 4 times
5	4 mn.	1 time + 5 times
6	5 mn.	1 time + 6 times

4. Turn the time setting with an hexagon socket wrench of 2mm (V2 release) or a little cross scrwedriver (V3 release) as shown in table opposite. .

   Note:
   To verify the value of the time setting, you need to switch off and then switch on the ignition.

5. Close carefully the cover of the box so that the card won't slide .

Starting up the truck again

When the truck has been turned off by the cut-off device, turn the ignition key on OFF.

Now you can start your truck again.

IMPORTANT RECOMMENDATION ABOUT FORKS LENGTH

IF YOUR TRUCK IS EQUIPPED WITH A FORK POSITIONER WITH SIDE SHIFTER **SERIES K (35K,55K,70K)**:

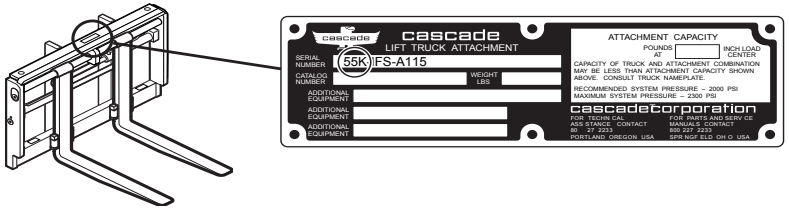

The maximum authorised forks length is 1500mm.

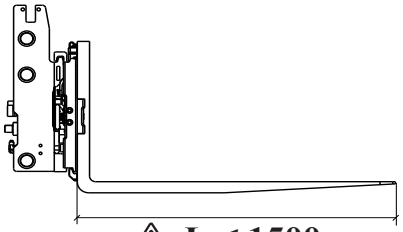

⚠ **L ≤ 1500**

SPECIALS MODELS

TOYOTA WIRELESS INFORMATION SYSTEM (T.W.I.S.)

en

The DHU-unit described in this manual is approved for use in GSM 900/1800 networks.

The following safety precautions must always be followed during installation, operation, service and repair work.

If these safety precautions are not followed, it can result in a breach of the product's safety standards regarding design, manufacturing and intended area of use.

The manufacturer is not responsible for the consequences if these safety pre-cautions are disregarded.

The DHU-unit emits radio waves when switched on.
Remember that interference can occur if it is used near TVs, radios, computers or equipment without adequate protection.

DANGER!
Risk of interference in medical equipment.
T.W.I.S. emits radio waves in the same way as cell phones and can therefore cause interference in medical equipment. Interference may result in patient safety being jeopardized.
If T.W.I.S is to be used near medical equipment, the same rules as for cell phones must be followed within the area concerned.

DANGER!
Risk of fire or explosion.
T.W.I.S can cause sparks that can ignite inflammable chemicals.Do not use T.W.I.S. in filling stations or close to fuel or other inflammable chemicals.

DANGER!
Risk of unintentional detonation of explosives.
Radio waves from T.W.I.S. can cause the unintentional detonation of explosives by primed detonators or similar being aaffected.
The same rules that apply for radio transmitters must be followed in the proximity of blasting areas, which usually means that T.W.I.S. must not be used there.

DANGER!
Risk of personal injury or material damage.
There may be special areas where the radio waves from the T.W.I.S. may cause unforeseen risks.
If there are, in an area, special instructions for the use of radio transmitters, cell phones or suchlike, then these instructions must be followed.

WARNINGS!
Risk of damage to the T.W.I.S.
The unit must not, under any circumstances, be opened.
Switching on and off must only be done in a de-energised state.
Only personnel that have adequate training may install or repair the product.

Note!
All connections in the truck must be made according to the recommended instructions for the connection of extra equipment.
Refer to the Service Manual for the truck in question.

STARTING THE TRUCK
Insert the ignition key
Turn the key to the [ON] position (1).
Enter your PIN code and press the green key [1] on keypad (2) to valid.
Turn the key to the [START] position (3).
The engine starts.

WARNINGS!
Wait until motor preheating ends before starting (light off).

STOP THE TRUCK
Press the red key [0] on keypad (2)
or
turn the key to the [OFF] position (4).
The engine stops.

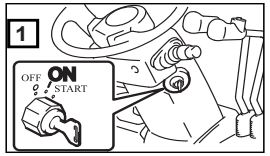

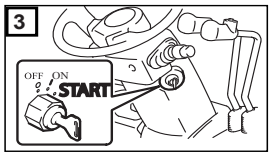

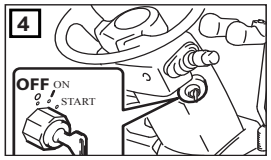

OPTIMAX SPECIFICATIONS

TOYOTA TONERO OPTIMAX

AUTOMATIC LIFT CONTROL OR A.L.C.

Principle:
The activation of lift lever or tilt lever increases the engine speed proportionally to the movement of the lever and allows to manage the speed of lifting or inclination.

It is not necessary to use the accelerator pedal to handle these speeds.

For operator safety, the transmission is cut off when using the ALC.

CAUTION

After using the ALC, press the accelerator pedal reactivate transmission and moves the truck.

Note:
With the function A.L.C. the engine speed does not reach its maximum.
To use the maximum engine speed for lifting or tilting, you have to press the accelerator pedal, making sure to press the approach pedal if you don't want the truck move.